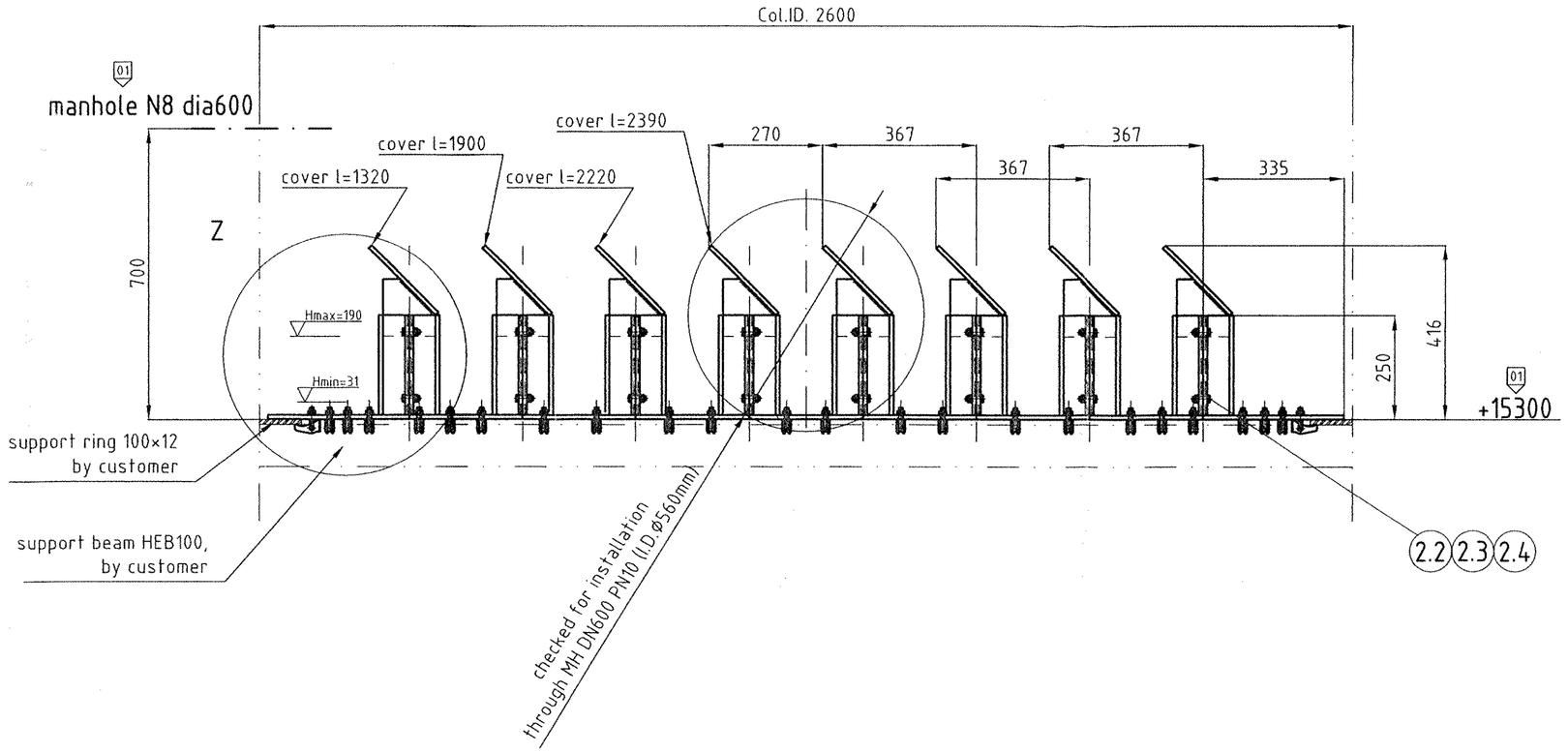

Z 1:5

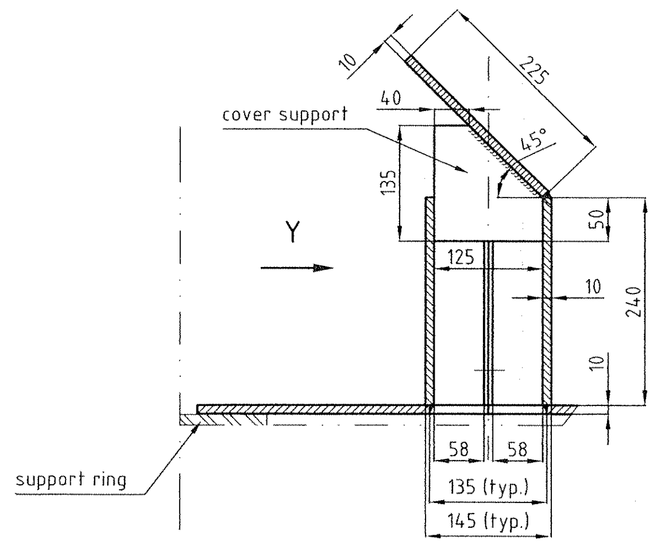

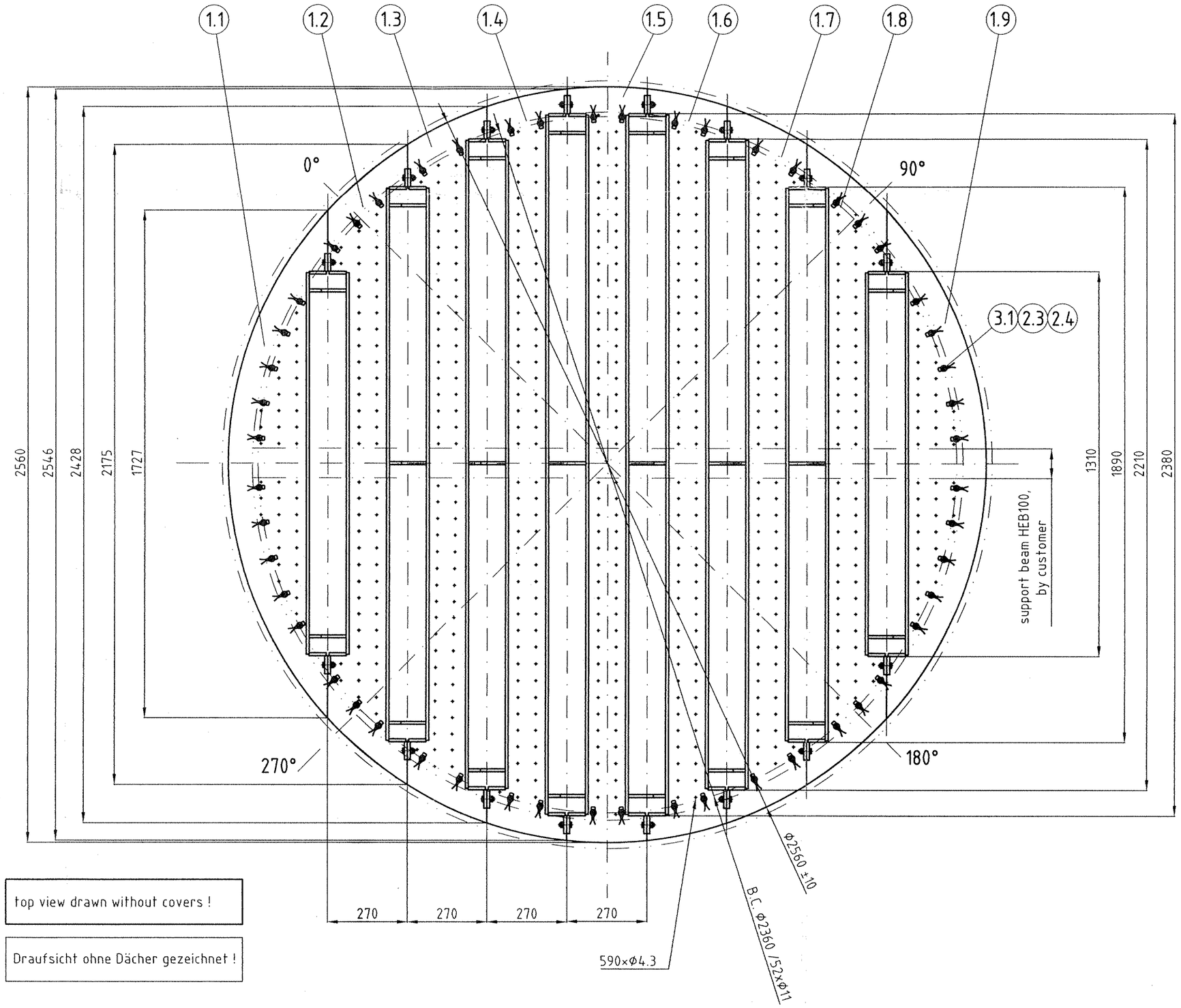

top view drawn without covers !

Draufsicht ohne Dächer gezeichnet !

Y 1:5

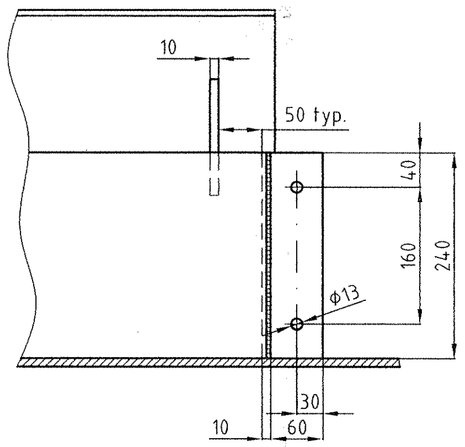

Pos. 3.1 1:2

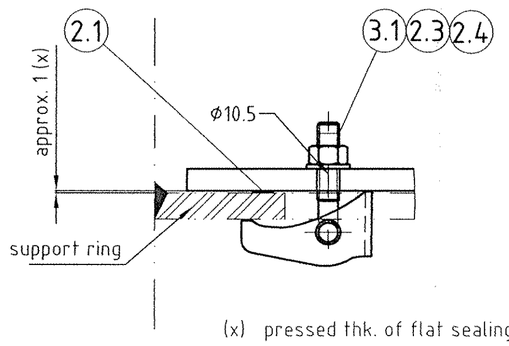

(x) pressed thk. of flat sealing cord after installation

installation all parts trough manhole N8 DN600 PN10 (ID.560)

10% of screws, nuts, washers and gaskets will be supplied in addition!

	item	name			material	piece/unit
01	3.1	clamping bracket			1.4571	52
01	2.4	hexagonal nut	DIN934	M10	A4-70	84
01	2.3	washer	DIN125	A10.5	A4	116
01	2.2	hexagonal bolt	DIN933	M10×40	A4-70	32
	2.1	flat sealing cord		10×3	PTFE	7.5 m
02	1.9	segment			PPH	1
02	1.8	segment			PPH	1
02	1.7	segment			PPH	1
02	1.6	segment			PPH	1
	1.5	segment			PPH	1
	1.4	segment			PPH	1
	1.3	segment			PPH	1
	1.2	segment			PPH	1
	1.1	segment			PPH	1

Liquid load:		40 m^3/h
Density:		/ kg/m^3
Viscosity:		/ cP
Operation range:		50-110 %
No. of drip points:		590 pcs
Diameter of drip points:		4,3 mm
No. of drip points area:		111 pcs/m^2
Free cross section:		appr. 35 %
Recommendation for liquid inlet:		
Diameter: dia6	d =	/ mm
No. of feed points:		/ pcs
Diameter of feed points: DN100	d =	/ mm
Weight (empty):		appr. 205 kg
Weight (with liquid):		appr. 780 kg

customer: Air Liquide — project: ASU Kosice

order no.: 4500024509 — position: DCAC

RVT-order no.: 30872 01

rev.	date	name	description	approved	date
02	19.07.2005	F. Prell	as built		
01	10.03.2005	R. Büttner	modified	M. Heierth	16.03.2005
00	22.01.2005	U. Napiralla	first issue		

Rauschert Verfahrenstechnik
Paul-Rauschert-Str. 6 , 96349 Steinwiesen
Technisches Büro: Im Gries 11, 96364 Marktrodach
Telefon +49 9261/6663-10 , Fax +49 9261/6663-19

material: PPH — weight: appr. 205 kg — piece / unit: 1

sheet: A1 — scale: 1:10

drawing issue: as built

description:

liquid redistributor dia2600 P200B

tolerances acc. DIN ISO 2768-c

copyright DIN34

drawing no.: R0501222-02 — Rev. 02