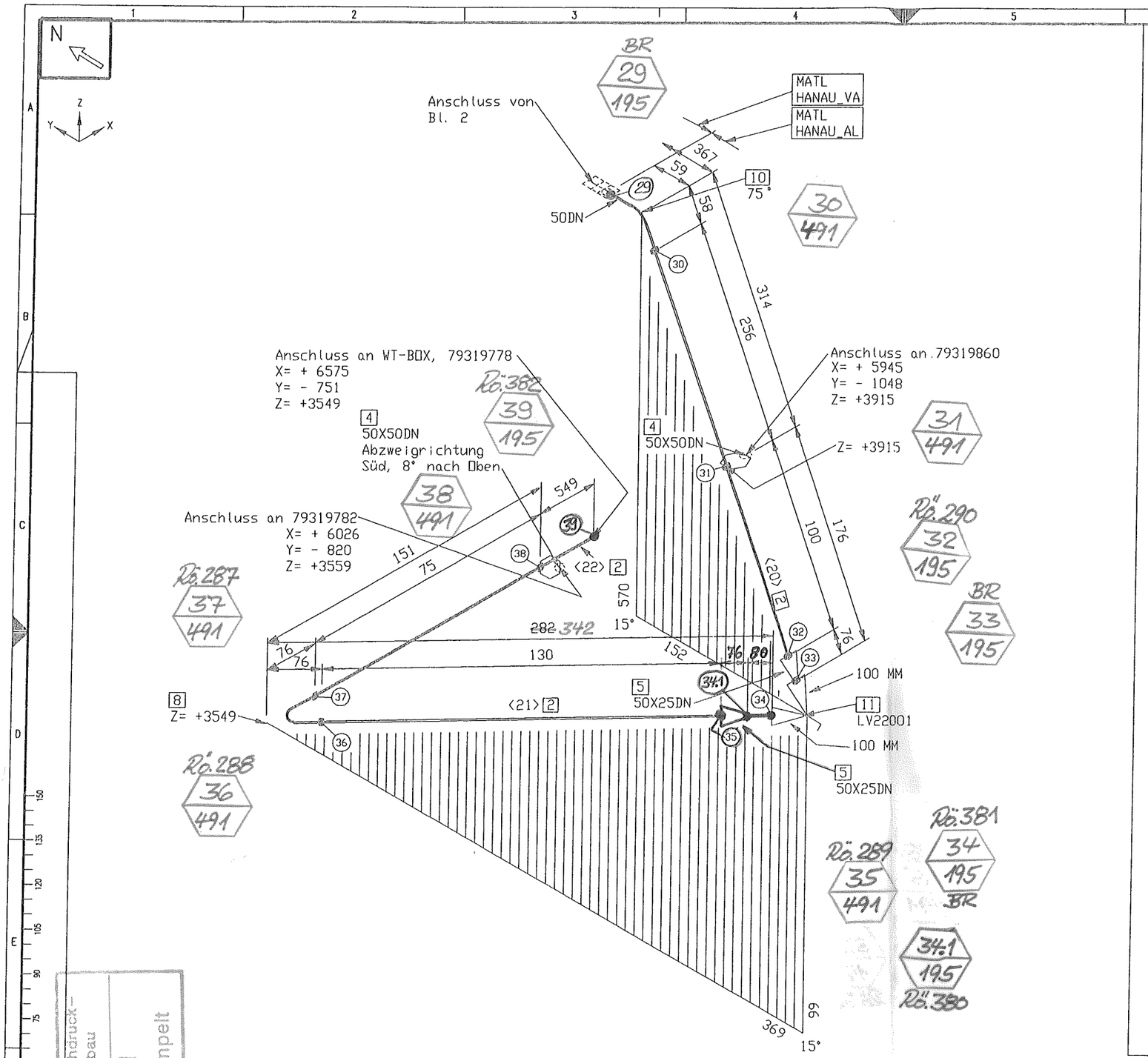

piping support, piping guides
View from top

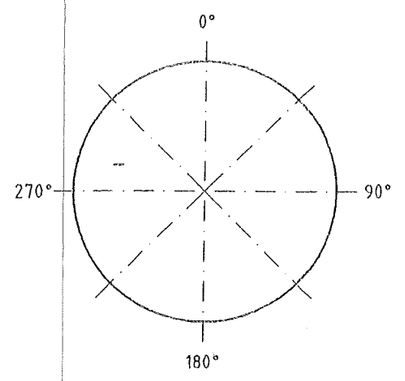

Essener Hochdruck-Rohrleitungsbau
Original
10. Juli 2003
ist in Ord gestempelt

ESSENER HOCHDRUCK-ROHRLEITUNGSBAU
AS BUILT

	Rev. No.	Date	By
E			
D			
C			
B			
A			
I			

This drawing is not to be reproduced, copied or used directly or indirectly in any way detrimental to our interests unless specifically authorized in writing by

Air Liquide AGS GmbH
Hanau

MATERIAL : HANAU_VA

Workpiece edges: -0.5 outside, +0.3 inside

SCALE

TOLERANCES : DIN 28005, DIN 8570, DIN 7168 mittel

ISO-Methode E

DATE : 12.08.2005
NAME : H.Schneider
CHECK : Frickhöfer 12/08/05

JOB CODE / REFERENCE :

K70101, ASU No.9 Kosice

Title :

DL 61102

All components cleaned for oxygen

Similar:
Subst.:
Replaced:

MASS kg

AIR LIQUIDE

SHEET : 3 OF SHEET : 3

DRAWING No.: 79320097

F Z C

ISOGEN INTEL NT (DIGITAL) VERSION 8.9.0 (14/12/00) 12/08/05 12:59