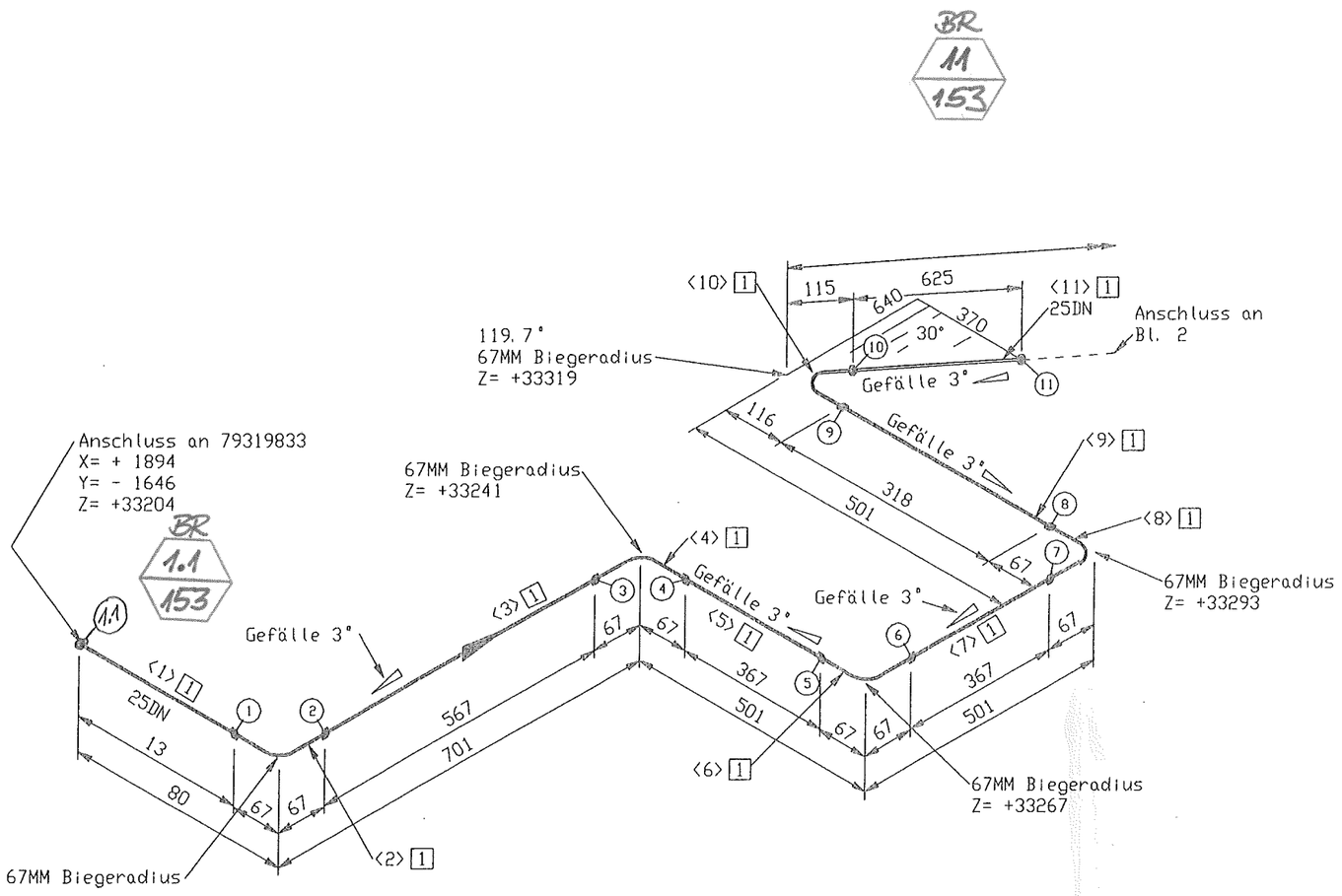

Stückliste

Lfd Nr.	Benennung	DN (MM)	Sachnummer	Menge	Gewicht (kg)
	Rohr				
1	ROHR 33,4 X 3,4 ALMG4,5MN W27	25	77038144	8601 MM	7.4
	Flansch				
2	AUSSENMANTELDURCHFUHRUNG DN 25	25	793.14729	1	2.0
			Summe Masse		9.4

Rohrzuschnitt

Rohr Stk.	Länge (MM)	DN (MM)	Bemerkung	Rohr Ende 1	Rohr Ende 2	Sachnummer
<1>	13	25				77038144
<2>	105	25	PLD BEND(1)			77038144
<3>	567	25				77038144
<4>	105	25	PLD BEND(1)			77038144
<5>	367	25				77038144
<6>	105	25	PLD BEND(1)			77038144
<7>	367	25				77038144
<8>	105	25	PLD BEND(1)			77038144
<9>	318	25				77038144
<10>	140	25	PLD BEND(1)			77038144
<11>	625	25				77038144
<12>	102	25	PLD BEND(1)			77038144
<13>	712	25				77038144
<14>	105	25	PLD BEND(1)			77038144
<15>	800	25				77038144
<16>	12	25	PLD BEND(1)			77038144
<17>	543	25				77038144
<18>	105	25	PLD BEND(1)			77038144
<19>	3002	25				77038144
<20>	88	25	PLD BEND(1)			77038144
<21>	184	25				77038144
<22>	122	25	PLD BEND(1)			77038144
<23>	9	25				77038144

piping support, piping guides
View from top

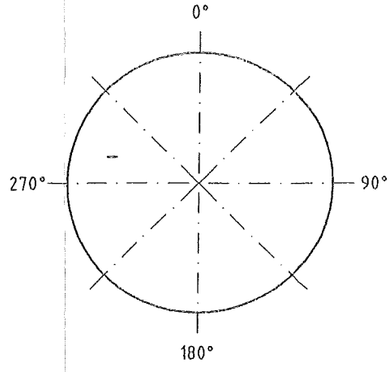

Rohr DN (MM) 25
CL Länge (MM) 8672

Rev. No.	Date	By

This drawing is not to be reproduced, copied or used directly or indirectly in any way detrimental to our interests unless specifically authorized in writing by

Air Liquide AGS GmbH Hanau

MATERIAL : HANAU AL
Workpiece edges ±0.5 outside ±0.3 inside
SCALE
TOLERANCES : DIN 28005 DIN 8570 DIN 7168 mittel
ISO-Methode E
DATE : 06.09.2005
NAME : H.Schneider
CHECK : Frickhöfer 06/09/05
JOB CODE / REFERENCE :
K70101, ASU No.9 Kosice
Title :
AL 43015

All components cleaned for oxygen
Similar:
Subst.:
Replaced:
MASS kg
AIR LIQUIDE
SHEET : 1 OF SHEET : 2
DRAWING No.: 79320059
F Z C

Essener Hochdruck-Rohrleitungsbau
Original
10. OKT. 2005
ist in rot gestempelt

ESSENER HOCHDRUCK-ROHRLEITUNGSBAU
AS BUILT

ISOGEN INTEL NT (DIGITAL) VERSION 8.9.0 (RUN 06/09/05 09:27