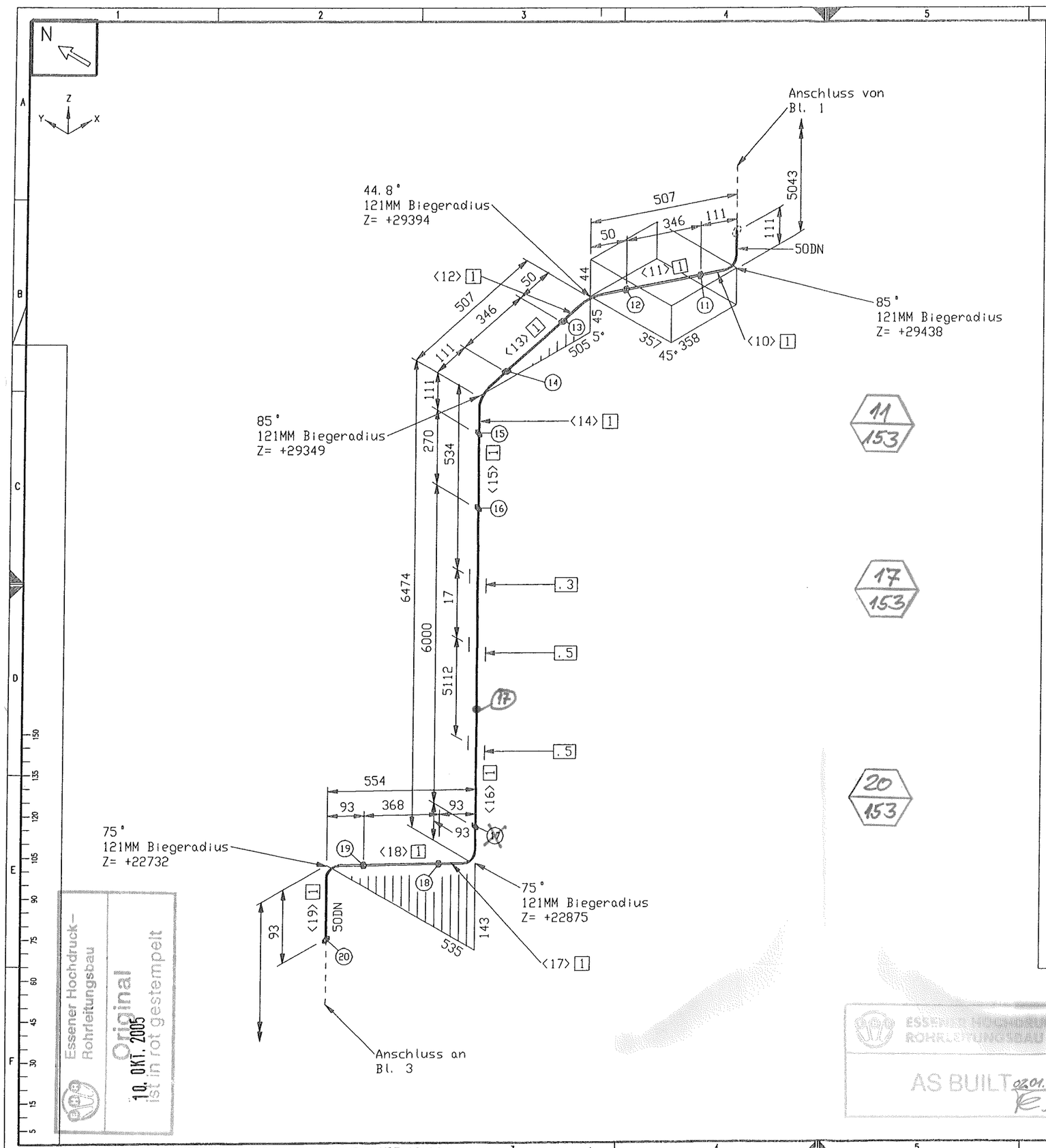

11/153

17/153

20/153

piping support, piping guides
View from top

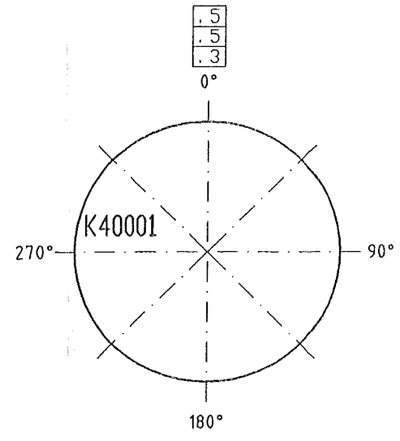

Essener Hochdruck-Rohrleitungsbau
Original
10. OKT. 2005
ist in rot gestempelt

ESSENER HOCHDRUCK-ROHRLEITUNGSBAU
AS BUILT 02.01.06

E			
D			
C			
B			
A			
I	Rev. No.	Date	By

This drawing is not to be reproduced, copied or used directly or indirectly in any way detrimental to our interests unless specifically authorized in writing by

Air Liquide AGS GmbH
Hanau

MATERIAL : HANAU_AL
Workpiece edges: -0.5 outside, +0.3 inside
SCALE
TOLERANCES : DIN 28005, DIN 8570, DIN 7168 mittel
ISO-Methode E
DATE : 05.08.2005
NAME : H.Schneider
CHECK : Frickhöfer 05/08/05

JOB CODE / REFERENCE :
K70101, ASU No.9 Kosice

Title :
N 21003

All components cleaned for oxygen
Similar:
Subst.:
Replaced:
MASS kg

AIR LIQUIDE

SHEET : 2 OF SHEET : 3
DRAWING No.: 79319872
F Z C

ISOGEN INTEL NT (DIGITAL) VERSION 8.9.0 (14/12RON 05/08X05 13:14