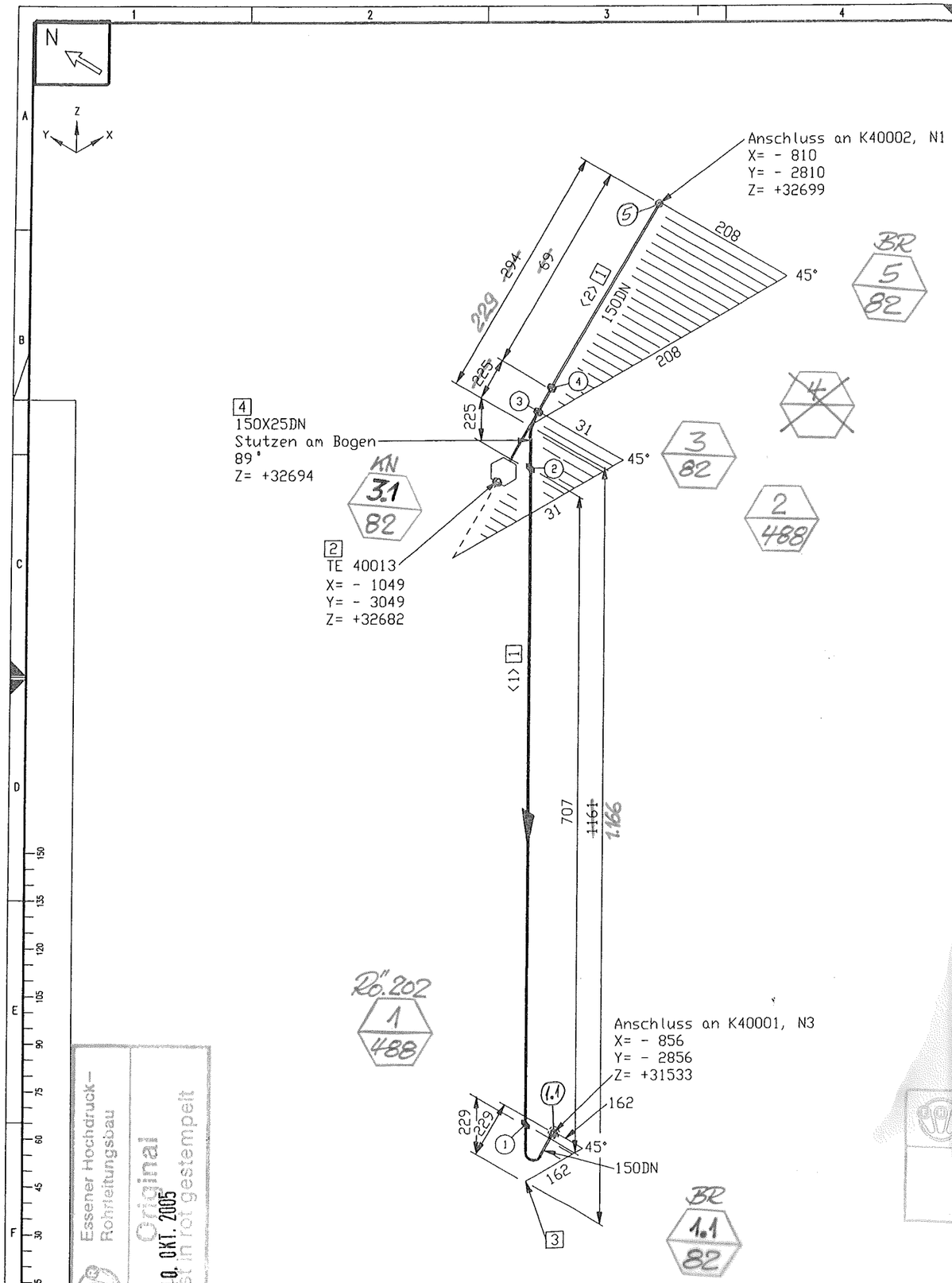


Stückliste

| Lfd Nr. | Benennung | DN (MM) | Sachnummer | Menge | Gewicht (kg) |
|---|---|---|---|---|---|
| | Rohr | | | | |
| 1 | ROHR 168,3 X 7,1 ALMG4,5MN W27 | 150 | 77038150 | 776 MM | 7.5 |
| | Fitting | | | | |
| 2 | THERMOMETEREINBAU AB DN125 | 150X25 | 793.12132 | 1 | 0.3 |
| 3 | BOGEN 168,3x7,1 DIN2605-2-90-3 ALMG4,5MN | 150 | 77038158 | 1 | 3.5 |
| 4 | BOGEN 168,3x7,1 DIN2605-2-90-3 ALMG4,5MN Stutzen auf 89 | 150 | 77038158_1 | 1 | 3.5 |
| | | | Summe Masse | | 14.8 |

Rohrzuschnitt

| Rohr Stk. | Länge (MM) | DN (MM) | Bemerkung | Rohr Ende 1 | Rohr Ende 2 | Sachnummer |
|---|---|---|---|---|---|---|
| (1) | 707 | 150 | | | | 77038150 |
| (2) | 69 | 150 | | | | 77038150 |

piping support, piping guides
View from top

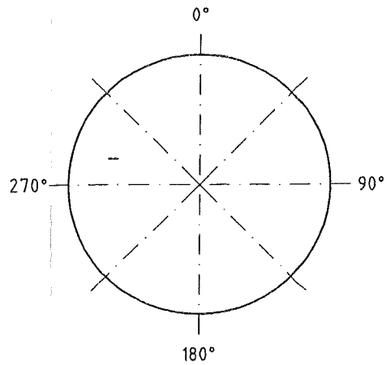


| | | |
|---|---|---|
| Rohr DN (MM) | 150 | 25 |
| CL Länge (MM) | 1684 | 44 |

Essener Hochdruck-Rohrleitungsbau
Original
10. OKT. 2005
ist in rot gestempelt

ESSENER HOCHDRUCK-ROHRLEITUNGSBAU
ABNAHMT 29.11.05

| Rev. No. | Date | By |
|---|---|---|
| | | |

This drawing is not to be reproduced, copied or used directly or indirectly in any way detrimental to our interests unless specifically authorized in writing by

Air Liquide AGS GmbH
Hanau

MATERIAL: HANAU_AL
Workpiece edges: -0.5 outside, +0.3 inside
SCALE
TOLERANCES: DIN 28005, DIN 8570, DIN 7168 mittel
ISO-Methode E
DATE: 11.08.2005
NAME: H.Schneider
CHECK: Frickhöfer 11/08/05
JOB CODE / REFERENCE: K70101, ASU No.9 Kosice
Title: RL 40005

All components cleaned for oxygen
Similar:
Subst.:
Replaced:
MASS kg
AIR LIQUIDE
SHEET: 1 OF SHEET: 1
DRAWING No.: 79319847
F Z C

ISOGEN INTEL NT (DIGITAL) VERSION 8.9.0 ( RUN 11/08X05 11:21