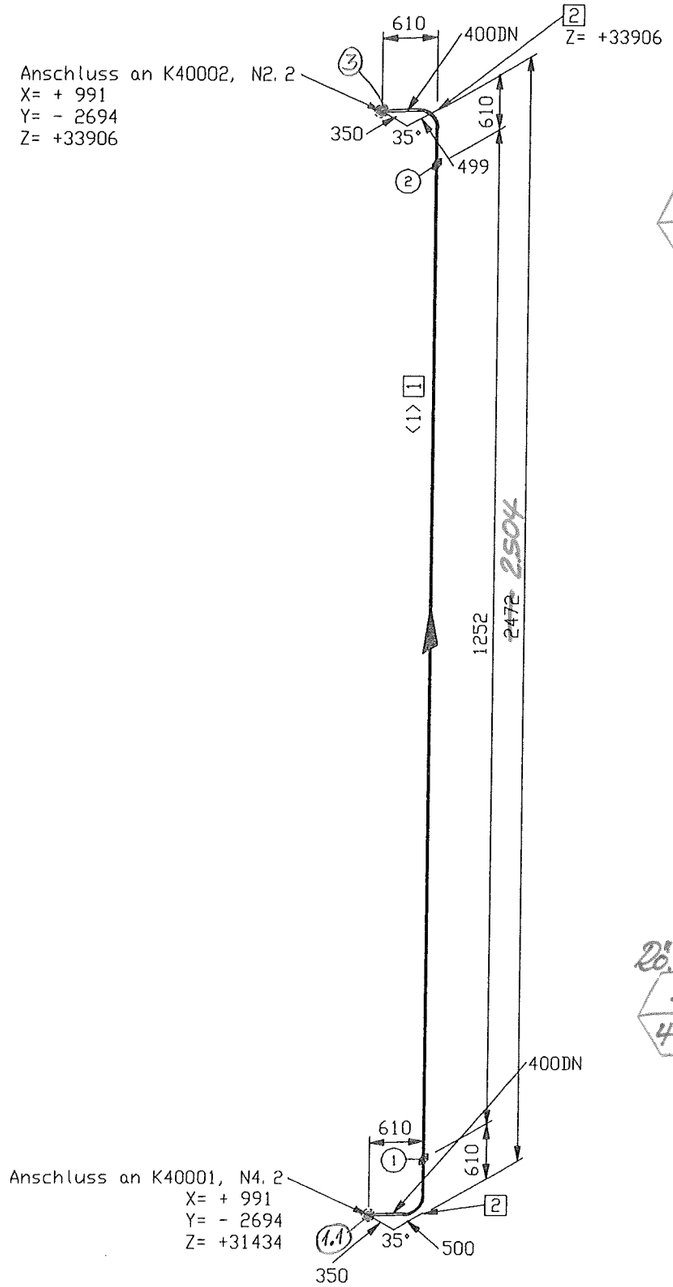

Stückliste

Lfd Nr.	Benennung	DN (MM)	Sachnummer	Menge	Gewicht (kg)
	Rohr				
1	ROHR 406 X 6 ALMG4,5MN W27	400	77038231	~~1252~~-MM 2.504	25.5
	Fitting				
2	BOGEN 406 x6 DIN2605-2-90-3 ALMG4,5MN	400	77038237	2	39.0
			Summe Masse		64.5

Rohrzuschnitt

Rohr Stk.	Länge (MM)	DN (MM)	Bemerkung	Rohr Ende 1	Rohr Ende 2	Sachnummer
<1>	1252	400				77038998

piping support, piping guides
View from top

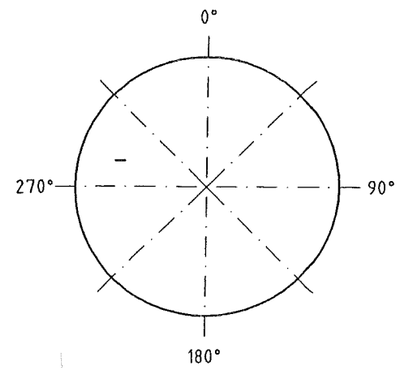

Rohr DN (MM) 400
CL Länge (MM) 3692

Essener Hochdruck-Rohrleitungsbau
Original
10. OKT. 2005
ist in rot gestempelt

ESSENER HOCHDRUCK-ROHRLEITUNGSBAU
AS BUILT 25.11.05

Rev. No.	Date	By

This drawing is not to be reproduced, copied or used directly or indirectly in any way detrimental to our interests unless specifically authorized in writing by

Air Liquide AGS GmbH Hanau

MATERIAL : HANAU_AL
Workpiece edges -0.5 outside +0.3 inside
SCALE
TOLERANCES : DIN 28005 DIN 8570 DIN 7168 mittel
ISO-Methode E
DATE : 11.08.2005
NAME : H.Schneider
CHECK : Frickhöfer 11/08/05
JOB CODE / REFERENCE :
K70101, ASU No.9 Kosice
Title :
R 40009

All components cleaned for oxygen
Similar:
Subst.:
Replaced:
MASS kg
AIR LIQUIDE
SHEET : 1 OF SHEET : 1
DRAWING No.: 79319846
F Z C