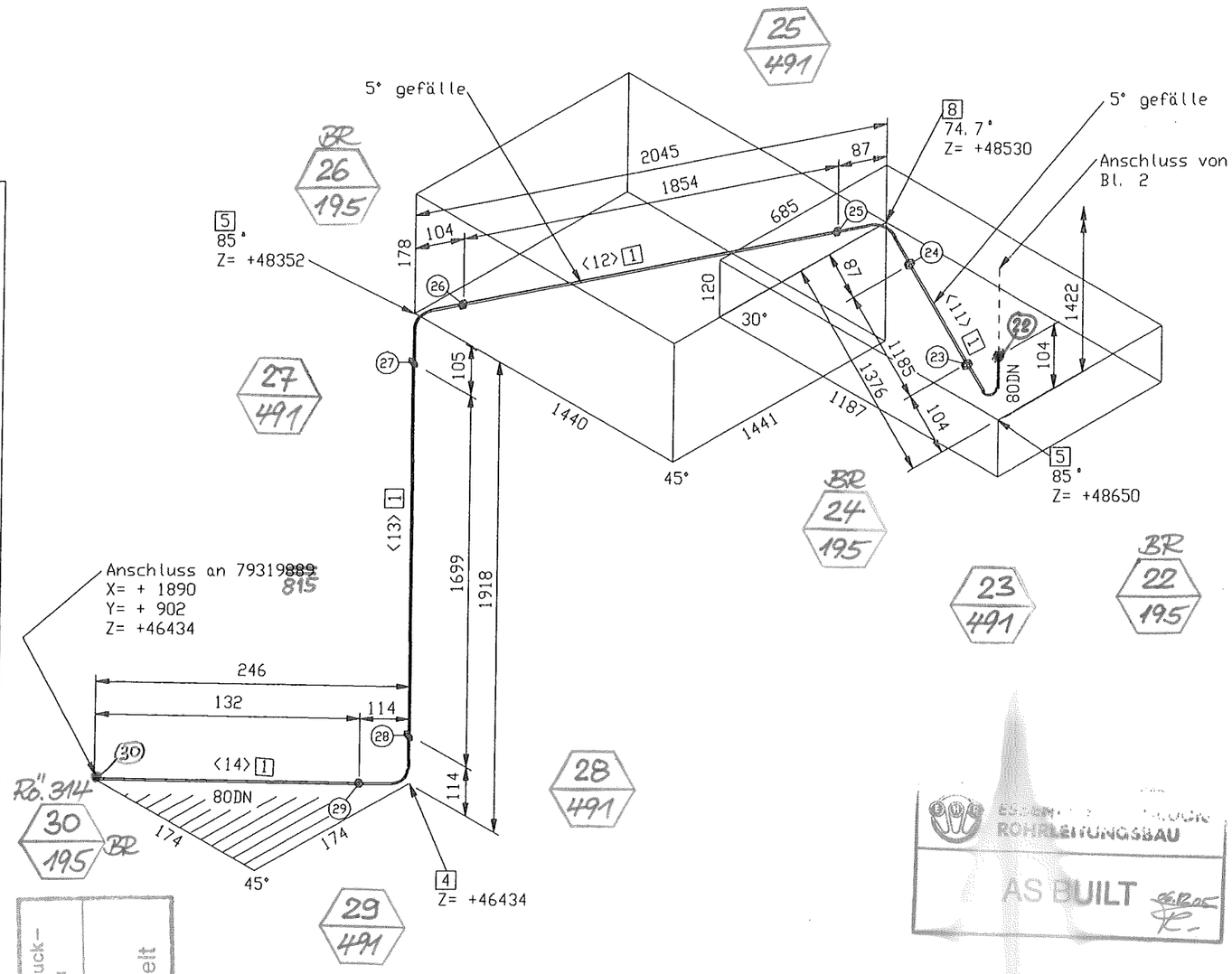

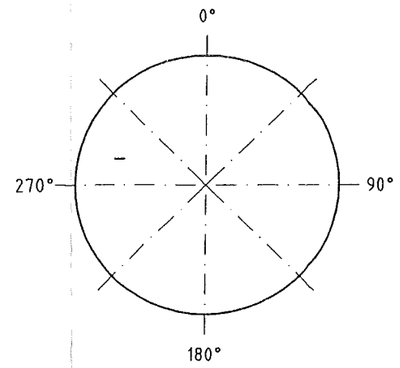

ESSENER HOCHDRUCK ROHRLEITUNGSBAU
AS BUILT

=VENTILKASTEN 3, Vormontage
valve box 3, pre-fabricating

Essener Hochdruck-Rohrleitungsbau
Original
10. OKT. 2005
ist in rot gestempelt

E			
D			
C			
B			
A			
I	Rev. No.	Date	By

This drawing is not to be reproduced, copied or used directly or indirectly in any way detrimental to our interests unless specifically authorized in writing by

Air Liquide AGS GmbH
Hanau

MATERIAL : HANAU_AL

Workpiece edges ±0.5 outside ±0.3 inside

SCALE

TOLERANCES : DIN 28005 DIN 8570 DIN 7168 mittel

ISO-Methode E

DATE : 04.07.2005
NAME : H.Schneider
CECK : Frickhöfer 04/07/05

JOB CODE / REFERENCE :
K70101, ASU No.9 Kosice

Title :
N 43009

All components cleaned for oxygen

Similar:
Subst.:
Replaced:

MASS kg

AIR LIQUIDE

SHEET : 3 OF SHEET : 3

DRAWING No.: 79319835

F Z C

ISOGEN INTEL NT (DIGITAL) VERSION 8.9.0 (14/12/04) 04/07/05 16:09