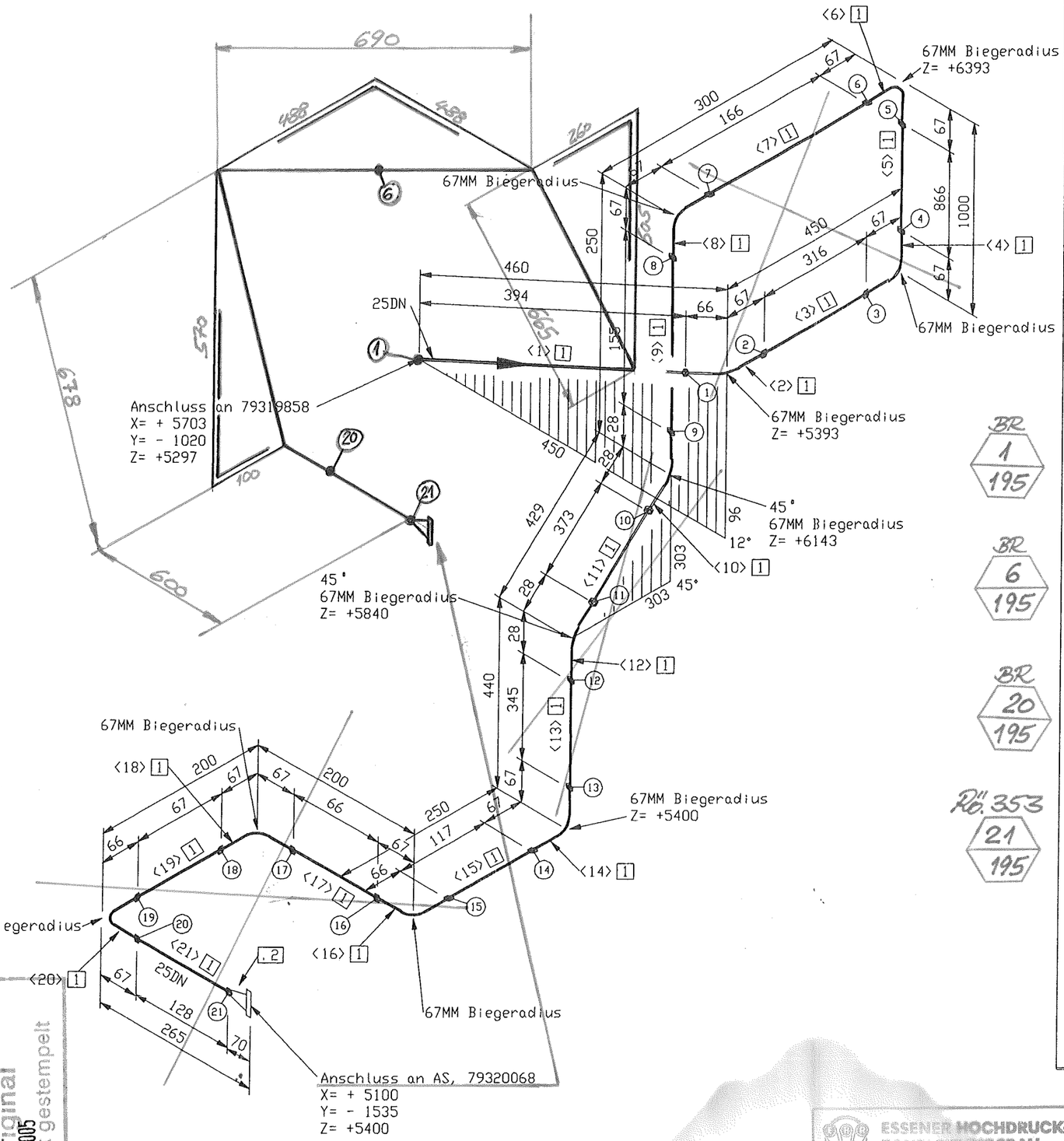

Stückliste

Lfd Nr.	Benennung	DN (MM)	Sachnummer	Menge	Gewicht (kg)
	Rohr				
1	ROHR 33,4 X 3,4 ALMG4,5MN W27	25	77038144	3936 MM	3.4
	Flansch				
2	AUSSENMANTELDURCHFÜHRUNG DN 25	25	793.11515	1	2.0
			Summe Masse		5.4

Rohrzuschnitt

Rohr Stk.	Länge (MM)	DN (MM)	Bemerkung	Rohr Ende 1	Rohr Ende 2	Sachnummer
<1>	394	25				77038144
<2>	104	25	PLD BEND(1)			77038144
<3>	316	25				77038144
<4>	105	25	PLD BEND(1)			77038144
<5>	866	25				77038144
<6>	105	25	PLD BEND(1)			77038144
<7>	166	25				77038144
<8>	105	25	PLD BEND(1)			77038144
<9>	155	25				77038144
<10>	53	25	PLD BEND(1)			77038144
<11>	373	25				77038144
<12>	53	25	PLD BEND(1)			77038144
<13>	345	25				77038144
<14>	105	25	PLD BEND(1)			77038144
<15>	117	25				77038144
<16>	104	25	PLD BEND(1)			77038144
<17>	66	25				77038144
<18>	105	25	PLD BEND(1)			77038144
<19>	67	25				77038144
<20>	104	25	PLD BEND(1)			77038144
<21>	128	25				77038144

piping support, piping guides

View from top

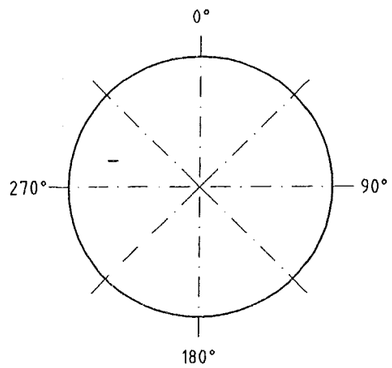

Rohr DN (MM) 25
CL Länge (MM) 4009

Essener Hochdruck-Rohrleitungsbau
Original
10. OKT. 2005
ist in rot gestempelt

ESSENER HOCHDRUCK-ROHRLEITUNGSBAU
AS BUILT

Rev. No.	Date	By

This drawing is not to be reproduced, copied or used directly or indirectly in any way detrimental to our interests unless specifically authorized in writing by

Air Liquide AGS GmbH Hanau

MATERIAL : HANAU_AL

Workpiece edges -0.5 +0.3 outside inside

SCALE

TOLERANCES : DIN 28005 DIN 8570 DIN 7168 mittel

ISO-Methode E

DATE : 23.08.2005
NAME : H.Schneider
CHECK : Frickhöfer 23/08/05

JOB CODE / REFERENCE :

K70101, ASU No.9 Kosice

Title :

NL 73001

All components cleaned for oxygen

Similar:
Subst.:
Replaced:

MASS kg

AIR LIQUIDE

SHEET : 1 OF SHEET : 1

DRAWING No.: 79319785

F Z C

ISOGEN INTEL NT (DIGITAL) VERSION 8.9.0 (RUN 23/08Y05 08:24