ANNEX

		Gezeichnet Dessiné	Geprüft Contrôlé
0	28.01.2005	CM	

Gezeichnet Dessiné	Geprüft Contrôlé

Pump Type: CL4 - 13 / EM 7,5

Motor type : 132S - 7.5 kW
Weight : approx. 170 kg

Arrangement drawing : LIN IC Pump P71100 P71200

Air Liquide AGS GmbH
4500023387
" Kosice "

sefco

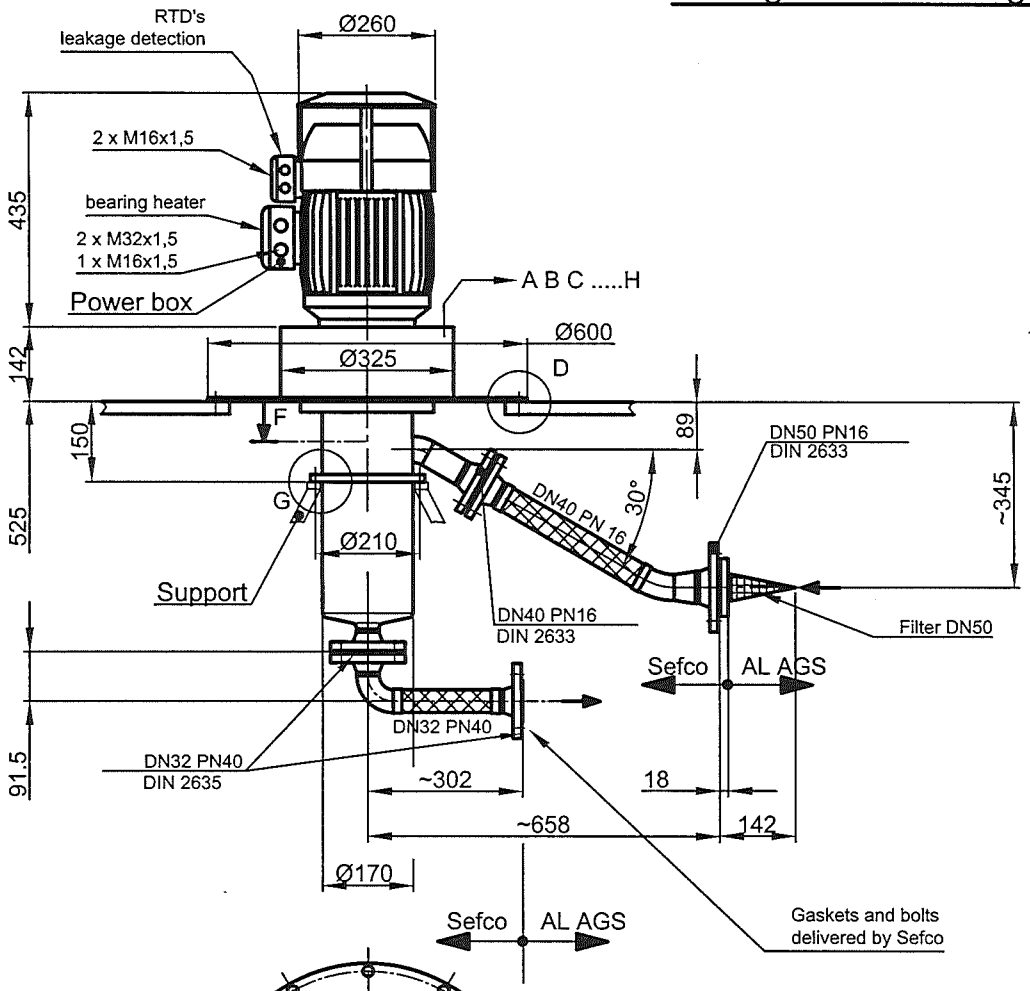

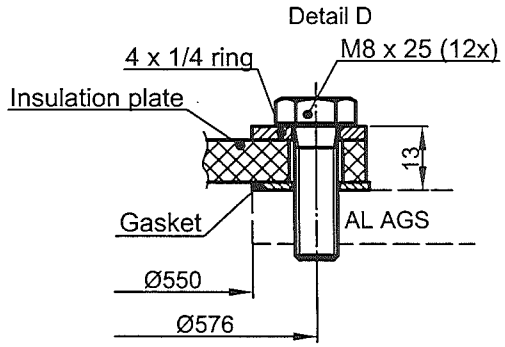

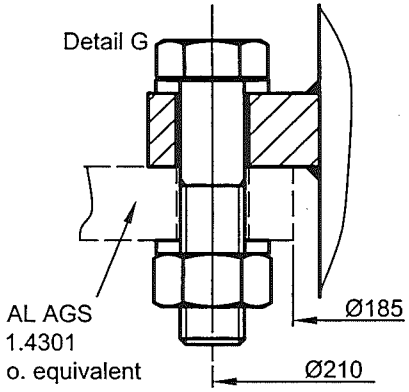

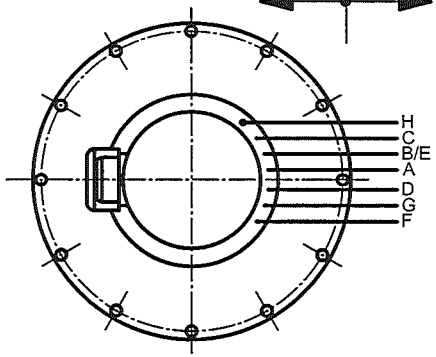

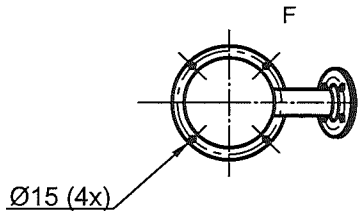

Anschlüsse Connections		
Pos.	Anschlussart , Funktion Connection type , Function	Rohrdurchm. (mm) Tube diameter (mm)
A	Spülgas Eintritt Purge gas inlet	6 / 4
B/E	Sperrgas Eintritt Seal gas inlet	6 / 4 6 / 4 ——> 12 / 10
C	Dichtdruck (Sperrgas) Seal gas pressure	6 / 4
D	Referenzdruck (Prozessgas) Reference pressure (process)	6 / 4
F	Spülgas Austritt Purge gas outlet	6 / 4
G	Entgasung Pumpe Pump vent	12 / 10
H	Entgasung Kapselung Hood vent	3/8 " female

05.044

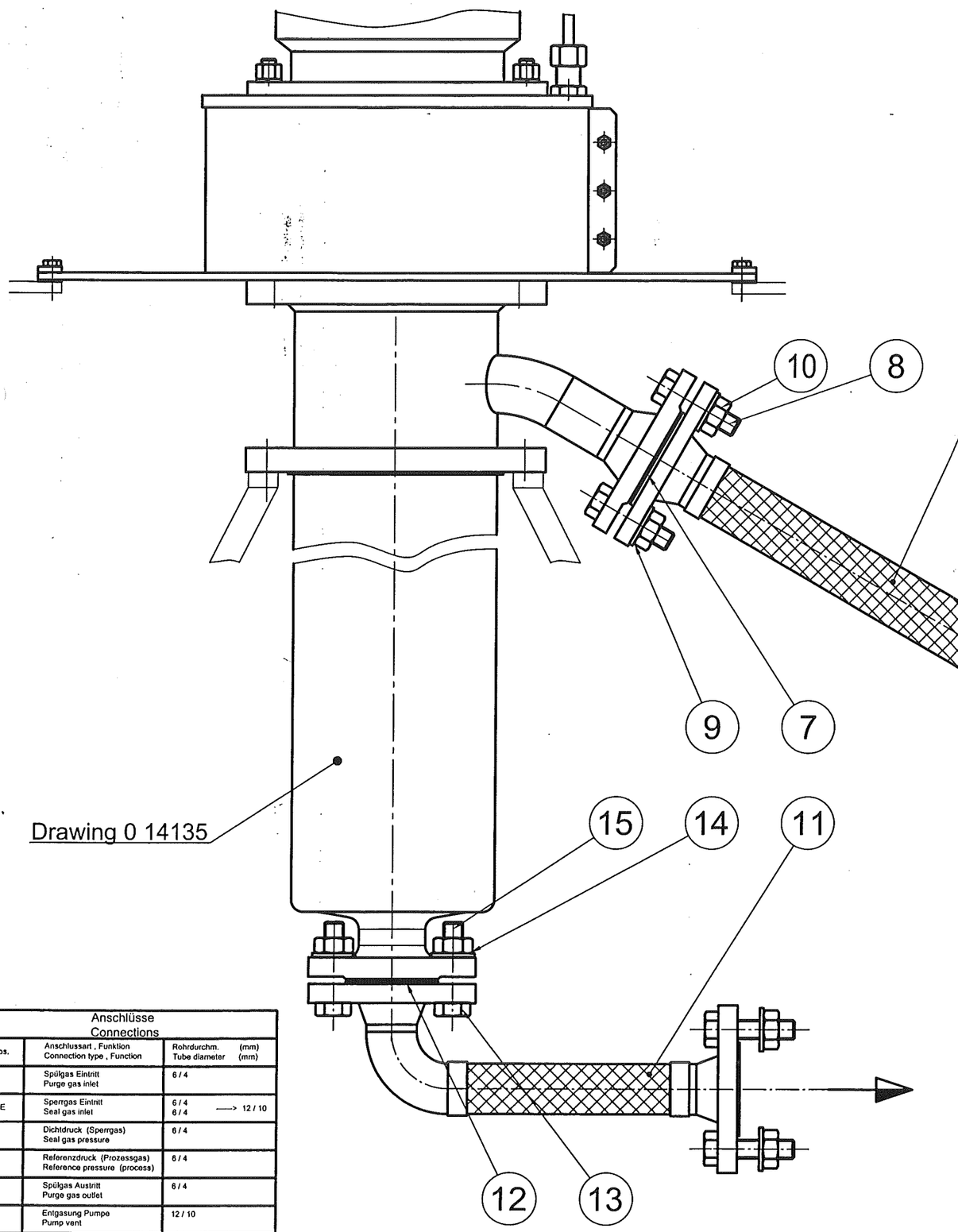

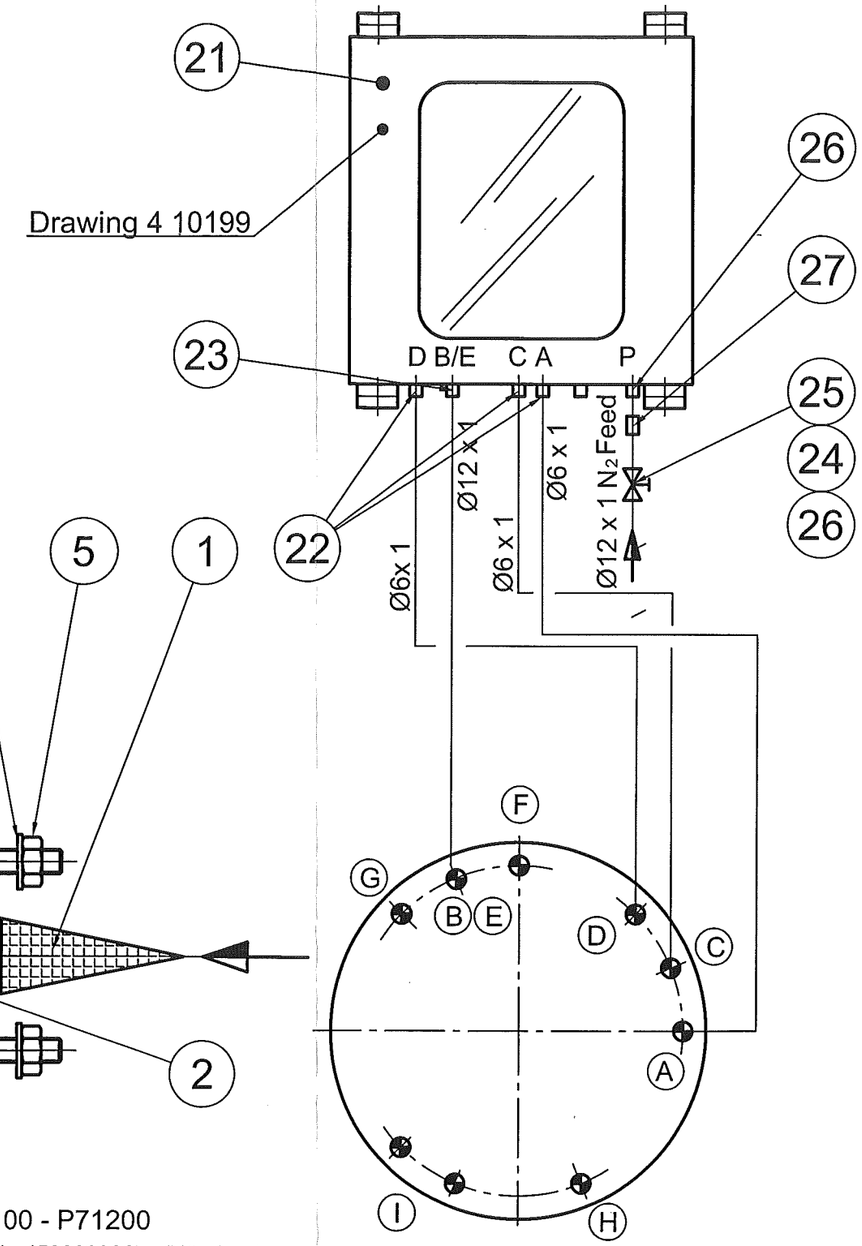

LIN IC Pump P71100 - P71200

Air Liquide AGS GmbH - 4500023387 - " Kosice "

Anschlüsse Connections		
Pos.	Anschlussart , Funktion Connection type , Function	Rohrdurchm. (mm) Tube diameter (mm)
A	Spülgas Eintritt Purge gas inlet	6 / 4
B/E	Sperrgas Eintritt Seal gas inlet	6 / 4 6 / 4 ——> 12 / 10
C	Dichtdruck (Sperrgas) Seal gas pressure	6 / 4
D	Referenzdruck (Prozessgas) Reference pressure (process)	6 / 4
F	Spülgas Austritt Purge gas outlet	6 / 4
G	Entgasung Pumpe Pump vent	12 / 10
H	Entgasung Kapselung Hood vent	3/8 " female

Stück Nbre	Gegenstand Spécification	Pos. Rep.	Werkstoff Matière		Modell Modèle	Bemerkungen Observations

Masse ohne Toleranzangabe	0 bis 6	uber 6 bis 30	über 30 bis 100	über 100 bis 300	über 300 bis 1000	über 1000 bis 3000	uber 3000 bis 4000	über 4000 -
Fein	± 0.05	± 0.1	± 0.15	± 0.2	± 0.3	± 0.5		
Mittel	± 0.1	± 0.2	± 0.3	± 0.5	± 0.8	± 1.2	± 2	± 3

Aenderungen

Ersetzt durch :
Remplacé par :
Ersatz für :
Remplace :

CL(4) - 13 / EM 7.5

Accessories

Massstab
Echelle
⋈

Gezeichnet Déssiné	NS	28.04.2005
Geprüft Controllé		
Normgeprüft Conforme aux normes		
Gesehen Vu		

sefco

05.044/14

Drawing: 05.044/14 **Accessories P71100 - P71200**

Item-No.	Parts per Unit	Nomenclature	Material	
			Rev:	Date
1	1	Suction strainer DN 50	0	11.05.2005
2	2	Gasket Ø 107 x 61 x 2		
3	4	Hexagon cap screw M16 x 75		
4	4	Washer M16		
5	4	Hexagon nut M16		
6	1	Flexible suction hose DN40 PN16		
7	1	Gasket Ø 92 x 49 x 2		
8	4	Hexagon cap screw M16 x 55		
9	4	Washer M16		
10	4	Hexagon nut M16		
11	1	Flexible discharge hose DN32 PN40		
12	2	Gasket Ø 82 x 43 x 2		
13	8	Hexagon cap screw M16 x 55		
14	8	Washer M16		
15	8	Hexagon nut M16		
16	-			
17	-			
18	-			
19	-			
20	2	Cable gland M12 x 1,5		
21	1	Control box seal-/purge gas regulation		
22	3	Panel mount union Ø 6		
23	2	Panel mount union Ø 12		
24	1	Female adaptor Ø 12 - 3/8"		
25	1	Ball valve Ø 12		
26	1	Male adaptor union Ø 12 - 3/8"		
27	1	Tube stub Ø 12		
28				
29				
30				
31				
32				
33				

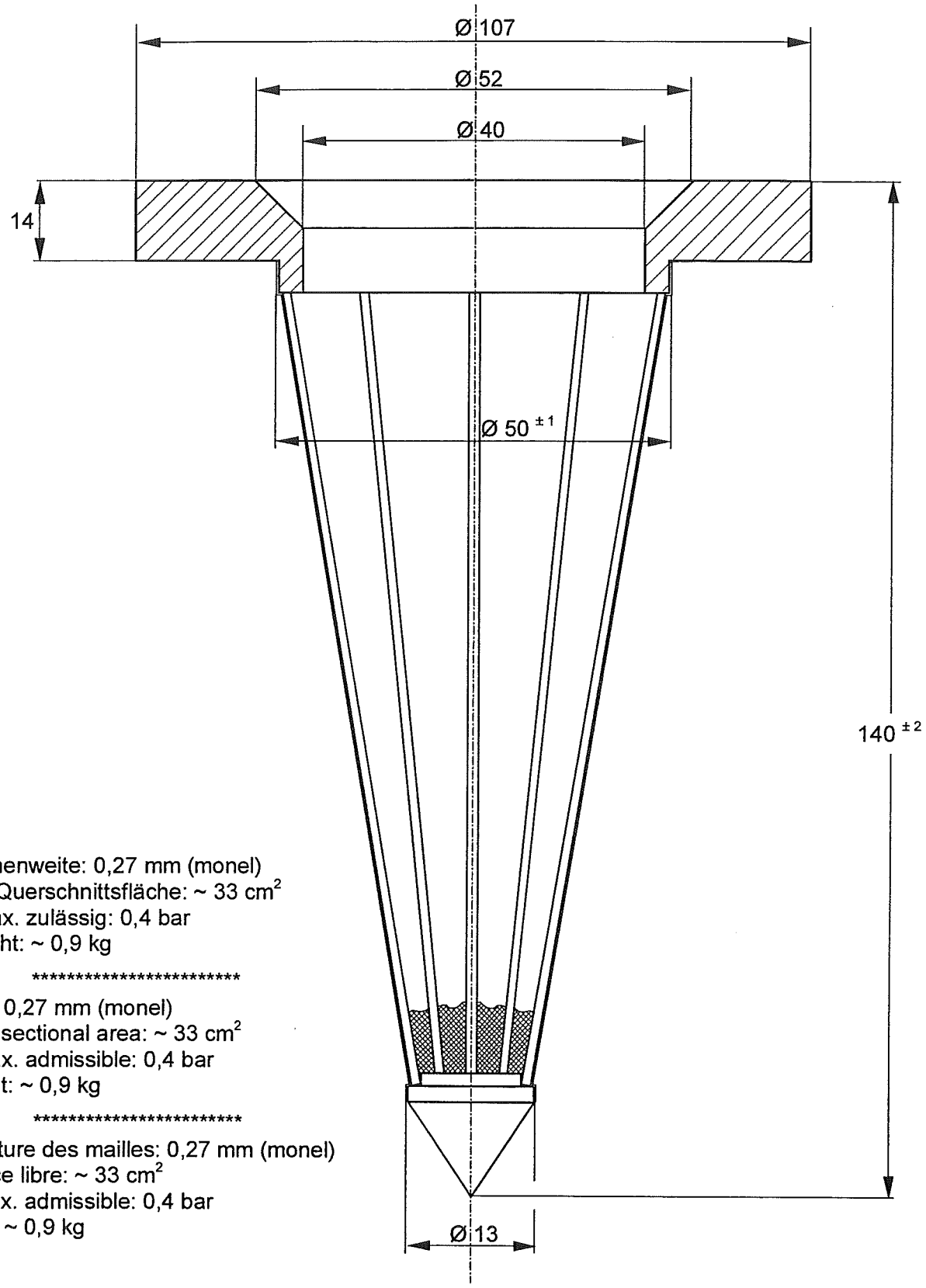

Maschenweite: 0,27 mm (monel)
Freie Querschnittsfläche: ~ 33 cm^2
Δp max. zulässig: 0,4 bar
Gewicht: ~ 0,9 kg

****

Mesh: 0,27 mm (monel)
Cross sectional area: ~ 33 cm^2
Δp max. admissible: 0,4 bar
Weight: ~ 0,9 kg

****

Ouverture des mailles: 0,27 mm (monel)
Surface libre: ~ 33 cm^2
Δp max. admissible: 0,4 bar
Poids: ~ 0,9 kg

Filter- Einbau / Strainer- Assembling / Montage du Filtre

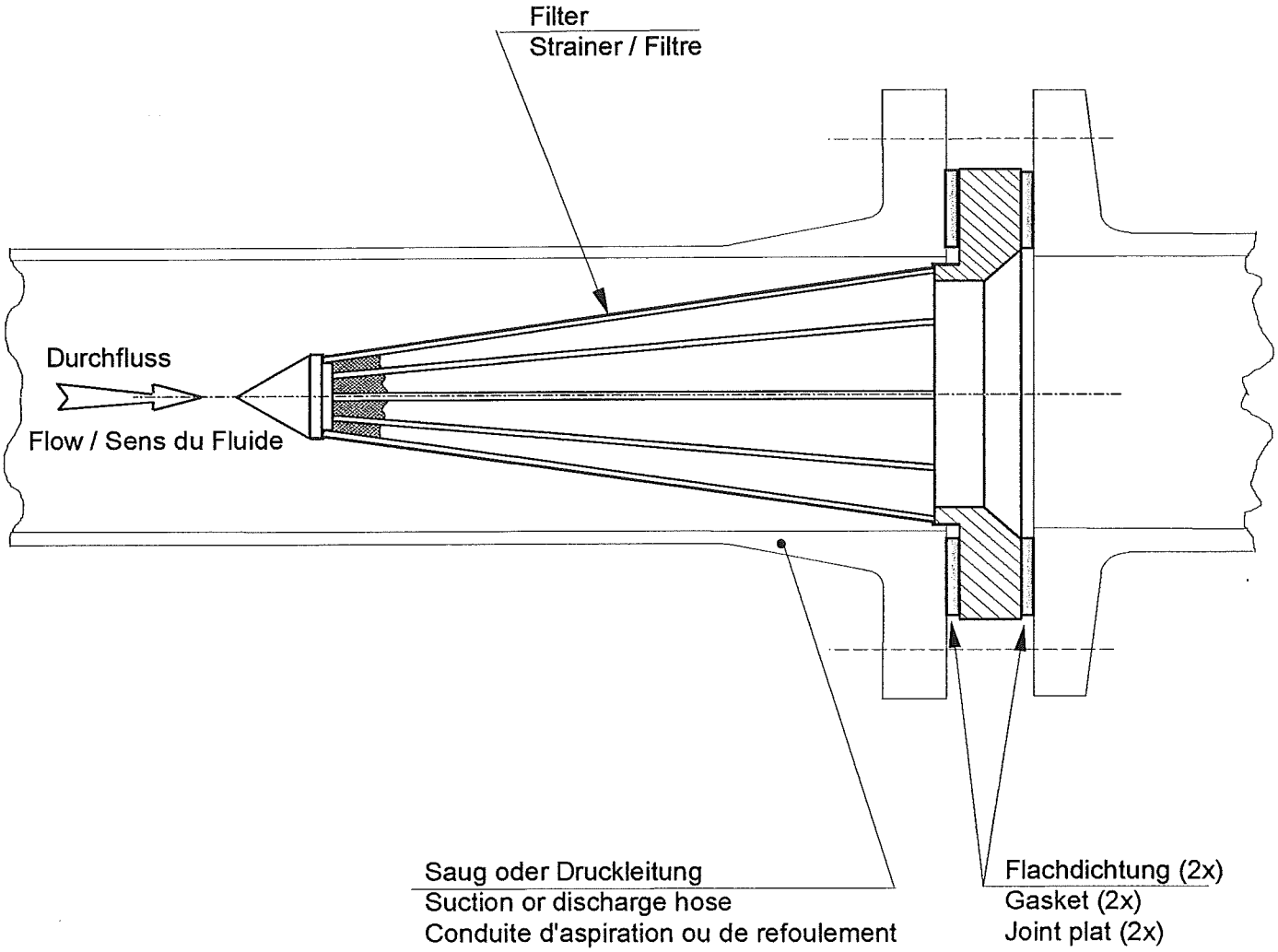

Temperaturüberwachung an der Pumpe
Temperature control at the pump
Protection thermique de la pompe

Die Pumpe *kann* mit folgenden Fühlern ausgerüstet sein :
The pump *can* be equipped with the following sensors :
La pompe *peut* être équipée des sondes suivantes :

Funktion	**Fühler Typ**	**Wellendichtung Typ**	**Empfohlene Schaltpunkte**
Function	**Sensor type**	**Shaft seal type**	**Recommended set point**
Fonction	**Type de sonde**	**Etanchéité type**	**Réglage recommandé**

Kaltfahrüberwachung	PT100		-140°C
Cool down survey	RTD		
Contrôle de mise à froid	PT100		

Leckage an der Dichtung	PT100	GRD oder Labyrinth	Alarm, alarme : -130° C Abschalten, shutdown, arrêt : -150° C
Seal leakage detection	RTD	Mechanical or labyrinth	
Détection de fuite à l'étanchéité	PT100	Mécanique ou à labyrinthes	

Leckage an der Dichtung	PT100	GRS (abhebende Dichtung)	Alarm, alarme : -160° C Abschalten, shutdown, arrêt : -180° C
Seal leakage detection	RTD	GRS (gas riding seal)	
Détection de fuite à l'étanchéité	PT100	GRS (à film gazeux)	

sefco	CL4 - 13	229-04/5

Impeller ∅ 130 / 3.8 mm with Inducer, Blade-ring
Diffuser 90

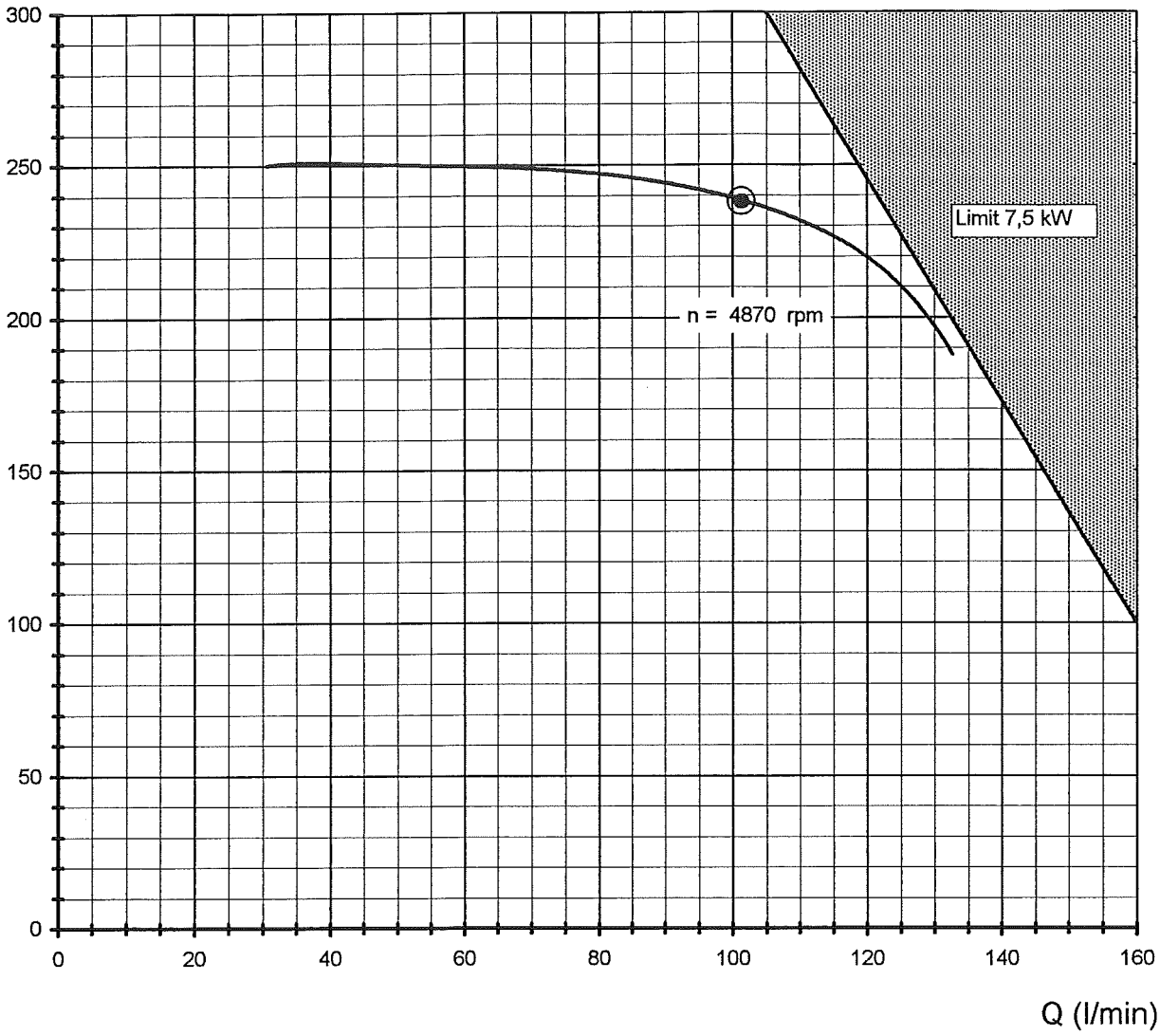

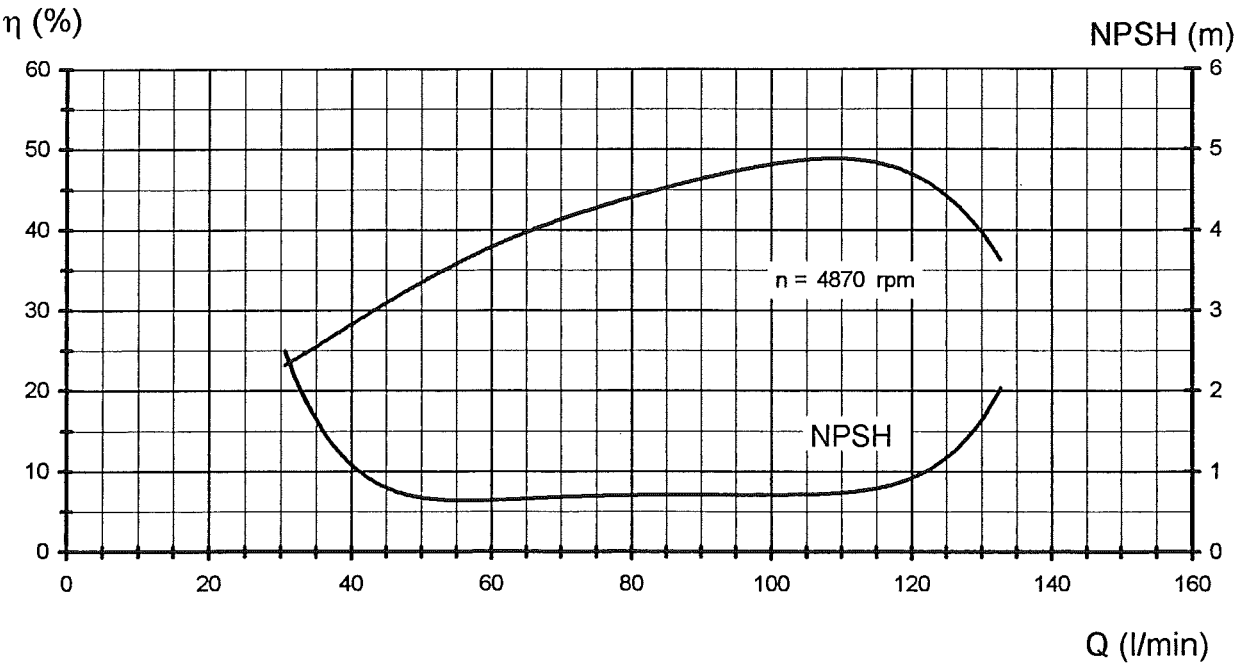

Gezeichnet Dessiné	C.M.	20.08.2004
Geprüft Controllé	W.P	01.11.2004

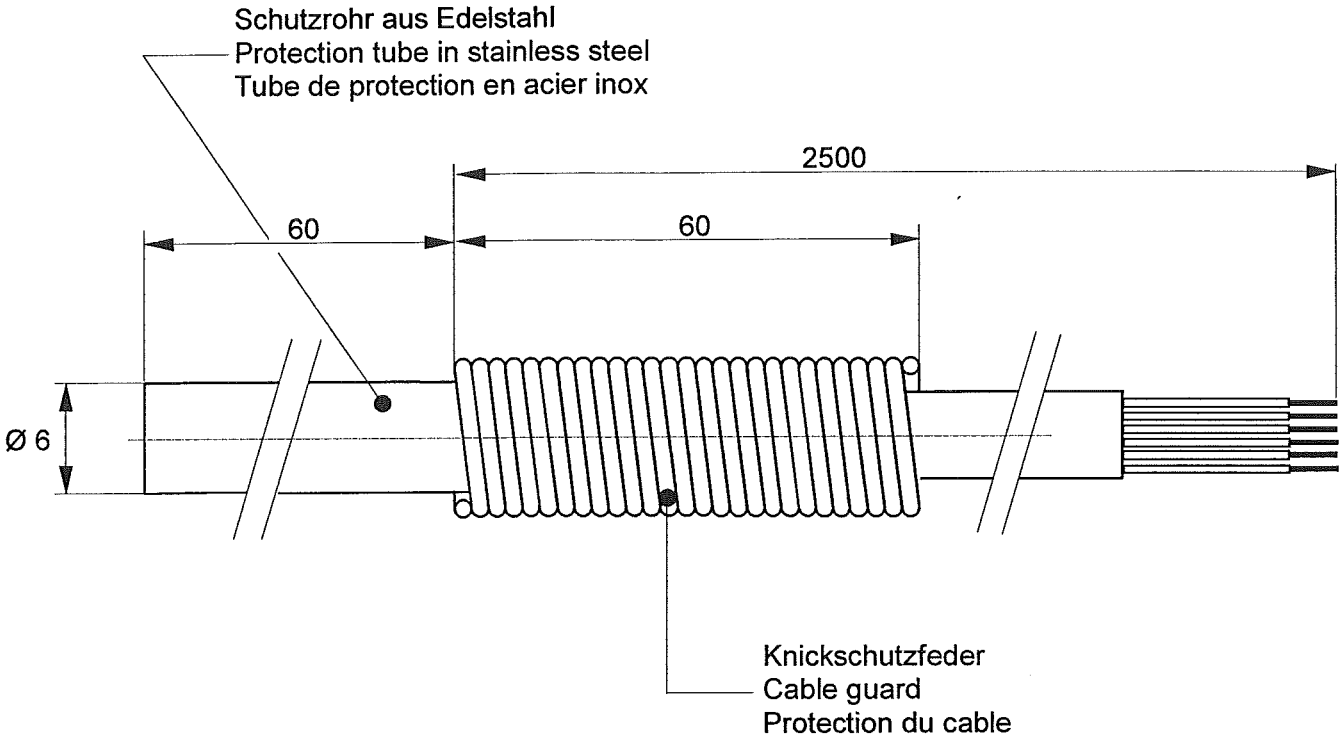

Typ - Type

- Widerstandsfühler 2x PT100, 2x 3 Leiter Klasse B
- Temperature sensor 2x PT100 (dual RTD's), 2x 3 wires class B
- Sonde de température 2x PT100, 2x 3 conducteurs classe B

Temperatur :
Temperature: ± 200°C
Température:

sefco

STEUERSCHRANK LABYRINTHDICHTUNG
CONTROLBOX LABYRINTH- SEAL

4 10199

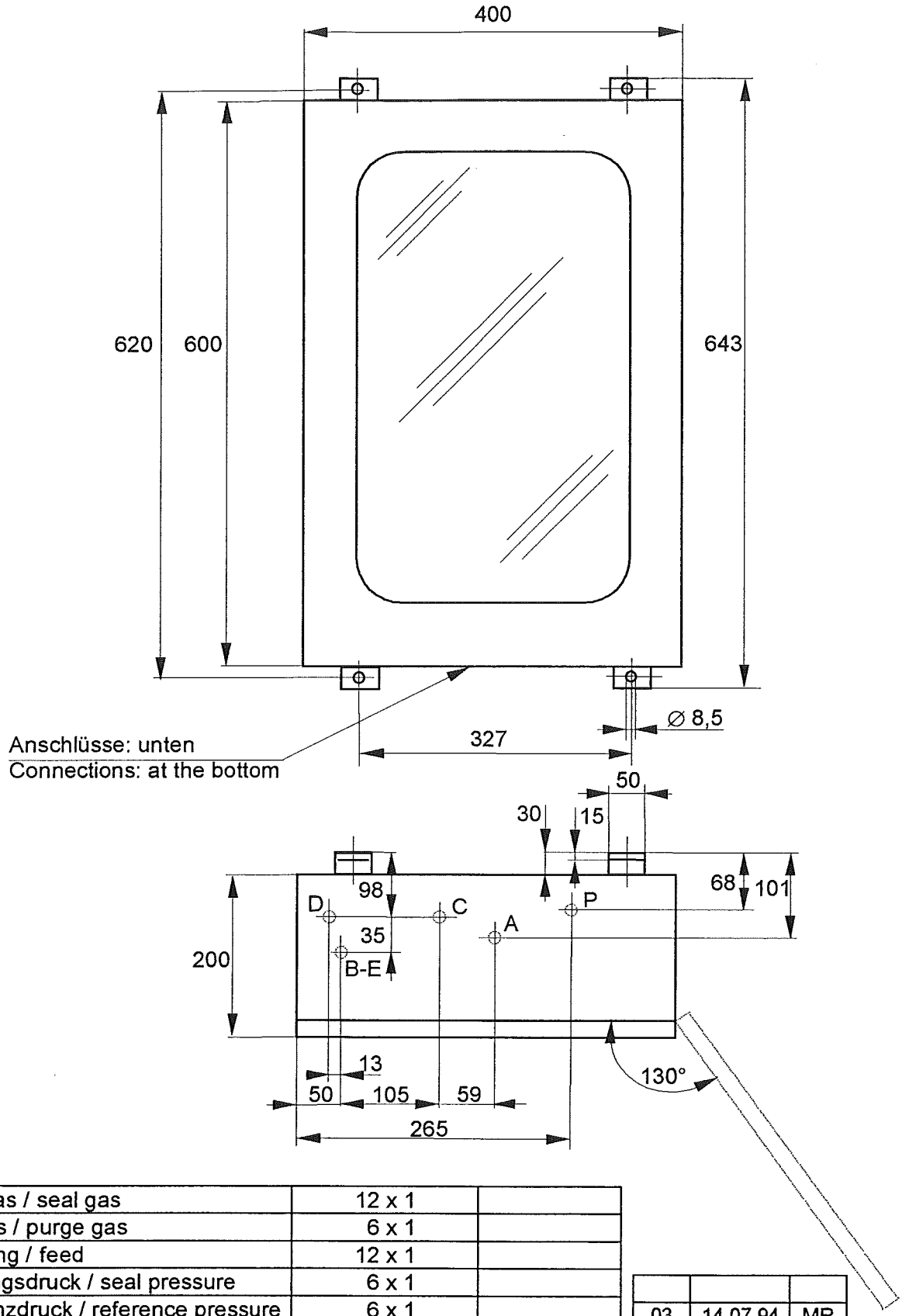

B-E	Sperrgas / seal gas	12 x 1	
A	Spülgas / purge gas	6 x 1	
P	Speisung / feed	12 x 1	
C	Dichtungsdruck / seal pressure	6 x 1	
D	Referenzdruck / reference pressure	6 x 1	
		Rohr Ø / Tube Ø	

03	14.07.94	MR
Rev.	Date	dwg

Air Liquide AGS GmbH

Order.Nr. : 4500023387
Tag Nr. : **P71100 – P71200**
Project Name: „ ASU Kosice "

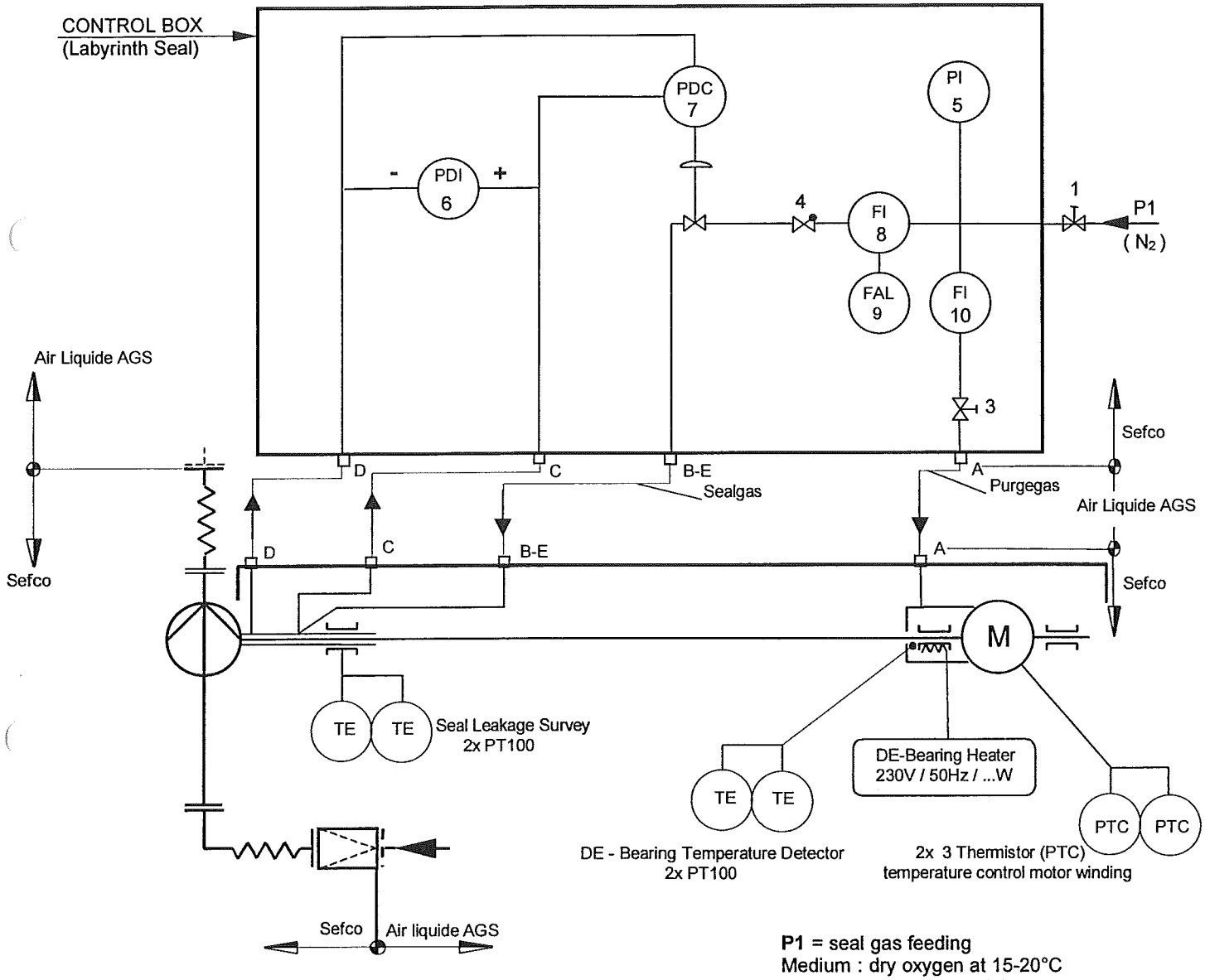

P1 = seal gas feeding
Medium : dry oxygen at 15-20°C
Pressure : 8 bar at box inlet

P2 = purge gas feeding
Medium : dry nitrogen at 15-20°C
Pressure : 4 bar at box inlet

Pos.	Fitting for tube
A	Ø 6 x 1
B-E	Ø 12 x 1
C	Ø 6 x 1
D	Ø 6 x 1
P	Ø 12 x 1

0	26.01.2005	WP	
REV	DATE	DWG	CHECKED

Control Point		No. off	Instruments	Manufacturer	Type	Technical Data	Remarks
P1	1	1	Regulating valve	Serto	SO56121-12-12		N2
	3	1	Regulating valve	Serto	SO55221-6-6		
	4	1	Non-return valve	Serto	SO57321-12		
PI	5	1	Pressure gauge	Wika	111.10.63	0..16 bar	
PDI	6	1	Diff. Pressure gauge	Wika	711.11.100	0..10 bar	
PDC	7	1	Diff. Pressure regulator	Sefco	DP 65		
FI	8	1	Flow-indicator	Vögtlin	V 100.140.19 ov		
FAL	9	1	Ring Sensor	Pepperl-Fuchs	RC15-14-N3Y49839		
		1	Switching amplifier	Pepperl-Fuchs	KFD2-SR2-Ex1 W	24VDC	
FI	10	1	Flow-indicator	Vögtlin	V 100.140.16 ov		

Air Liquide AGS GmbH
Order Nr.: 4500023387
Tag Nr.: **P71100 – P71200**
Project Name: „ ASU Kosice "

0	17.02.2005	WP		
REV	**Datum**	**Gezeichnet**	**Geprüft**	

Durchflußüberwachung (Sperrgas) - Flow- Control (Seal- gas)

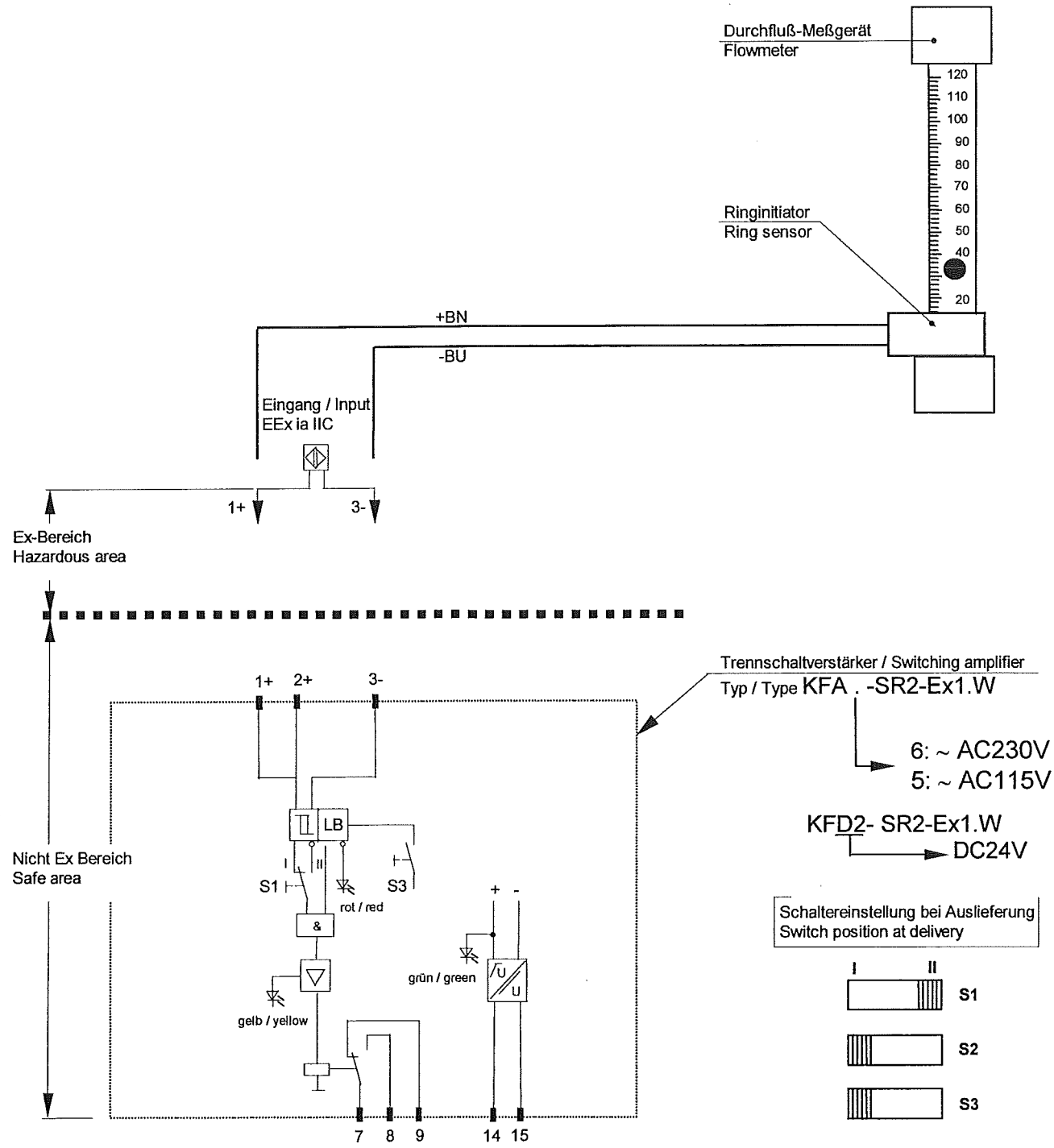

Standard Design

Design and accuracy correspond to normal specifications. This gauge can be used for all liquids and gases under pressure, except those which attack copper alloys, have a high viscosity or are liable to crystallize.

Application

Measurement of positive and negative pressures in the range up to 1000 bar maximum.

Type

Type	*Parts in contact with fluid*	*Type of case*
111.10	Copper alloy	steel with snap-in window

Technical characteristics

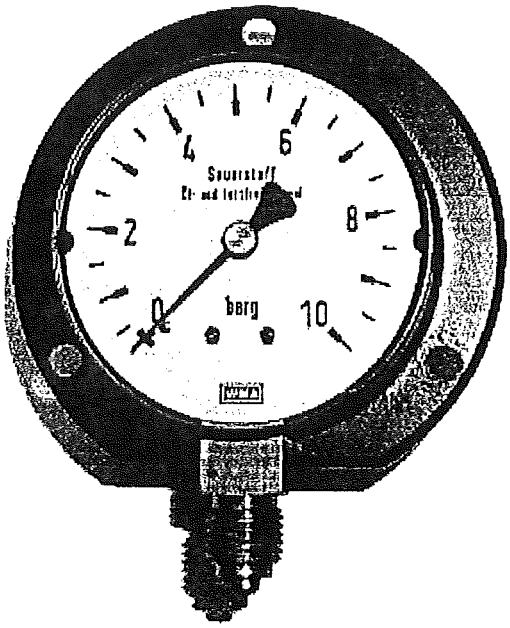

Accuracy: ± 1,6% off full scale deflection.

Temperature range

Ambient temperature: -25° up to +60 °C
Fluid temperature: soldered gauge up to +60 °C
welded gauge up to +100 °C

Temperature coefficient of indication (reference temperature +20 °C)

The deviation of the indication is +0,3% per 10 °C of the indicated value for higher temperatures and -0,3% per 10 °C of the indicated value for lower temperatures.
The temperature used for the correction of the indication is the temperature of the measuring system and not
the temperature of the process fluid.

Operating range

75% of full scale reading for static loads
60% of full scale reading for fluctuating loads
Short term peaks to full scale reading permissible

Design features of standard type

Compact measuring system design. This means that connection, tube base, measuring element, movement and dial constitute a functional unit freely mounted in the casing. The plastic window is fixed to the casing by a practical snap-fit bezel.

Type	111.10
Nominal size	63
Design	
Connection	
Brass	X
G 1/4"A, DIN 16288	X
Width across flats 14 mm	X
Bourdon tube	
Copper alloy, soft soldered	
Circular up to 40 bar	X
Coiled above 60 bar	X
Movement	
Brass	X
Dial	
Plastic ABS, white background, black graduations and lettering with Stop pin.	X
Pointer	
Aluminium, black	X
Case	
Steel, black lacquered	X
Window	
Acrylic plastic, domed	
Snap-fit bezel	X

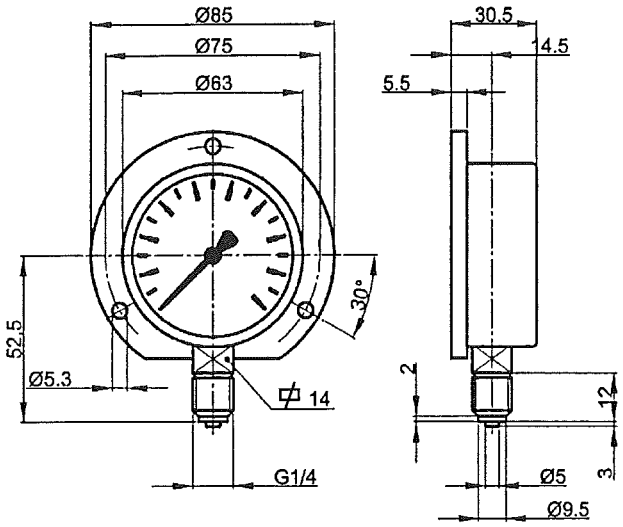

Application

This pressure gauge is suitable with gaseous media and liquids of thin consistency not containing suspended matter. The dial indication facilitates readout of pressure differential as well as of both pressures applied (no vacuum).

Type

Type	*Wetted parts made of*	*Case design*
711.11	Copper alloy	Case and bezel ring black finish steel and V-connector

Measuring principle

The case contains two independently operating bourdon tube pressure elements. Any pressure applied to either one element results in proportional element deflection. Movement and pointer arrangement provides for indication of either one pressure on a 270° scale.

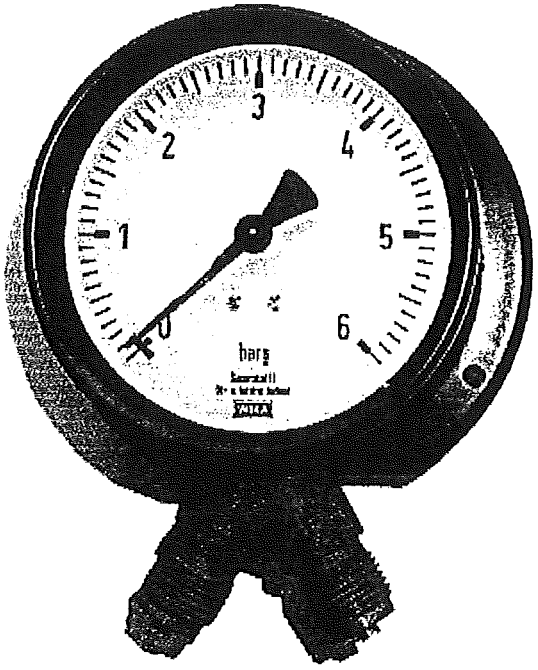

Design

Pressure elements are protected by a rigid case. Pressure element assembly together with dial, pointer and movement are a self contained unit and retained in the case in such a way that any case distortion will not affect measurement. Pressure elements of Cu-alloy are of the circular type. Cu alloy elements are soldered. The gauge window is made of flat instrument glass and retained by a slip-on bezel ring.

Instrument specification

Accuracy: DIN class 1,6.

Operating temperature
Ambient: -25° to +60 °C
Fluid: +60 °C max.

Error caused by temperature deviating from +20 °C

+0,3% each 10 °C increase
-0,3% each 10 °C decrease of scale value indicated.
Actual temperature at pressure element refers, which is not necessarily the temperature of the fluid.

Suitable working pressure

3/4 of max. scale value with steady pressure
2/3 of max. scale value with fluctuating pressure

Maximum static pressures

Same as scale range

Type	711.11
Nominal size	100
Design (differential readout, 60° V-connector)	
Connector material Brass Pressure entry 2x G 1/2"A, marked "+" and "-"	X
Pressure element Cu alloy, C-shape, soldered	X
Movement Platelets brass, wear parts argentan	X
Dial Aluminium with black marking	X
Pointer Aluminium black pointer "+" side red pointer "-" side	X
Case Black finish steel	X
Window Flat instrument glass	X
Bezel ring Black finish steel	X
Weather protection DIN 40050 refers	IP33

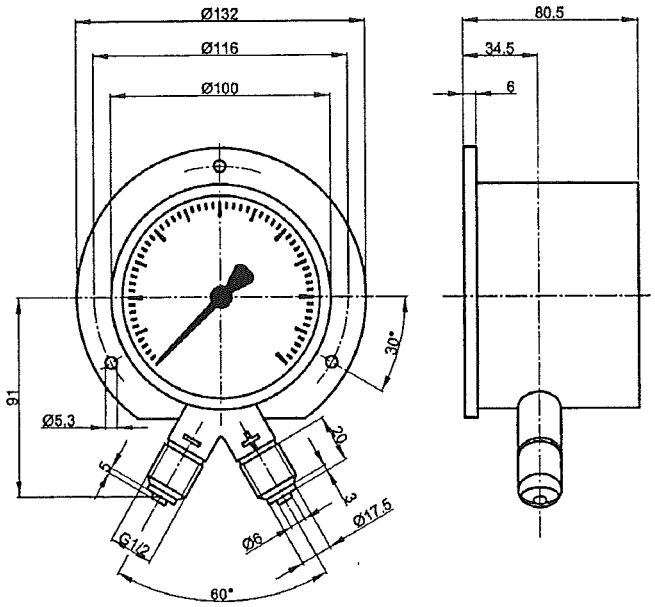

The differential pressure regulator SEFCO type DP 65 is a component of the seal-/purge gas control-box. It assures the tightness of the liquid gas-centrifugal pump with labyrinth seal and regulates the exit pressure (p_a). The reference pressure (p_r), measured in the pump, as well as the differential pressure (Δp), adjustable with the setting screw are the first reference. The resulting seal gas pressure (p_s) in the labyrinth seal is the second reference.

The differential pressure $\Delta p = p_s - p_r$ is adjustable in a range of approx. - 0,2 to + 0,5 bar ($p_s = p_a$ - piping losses).

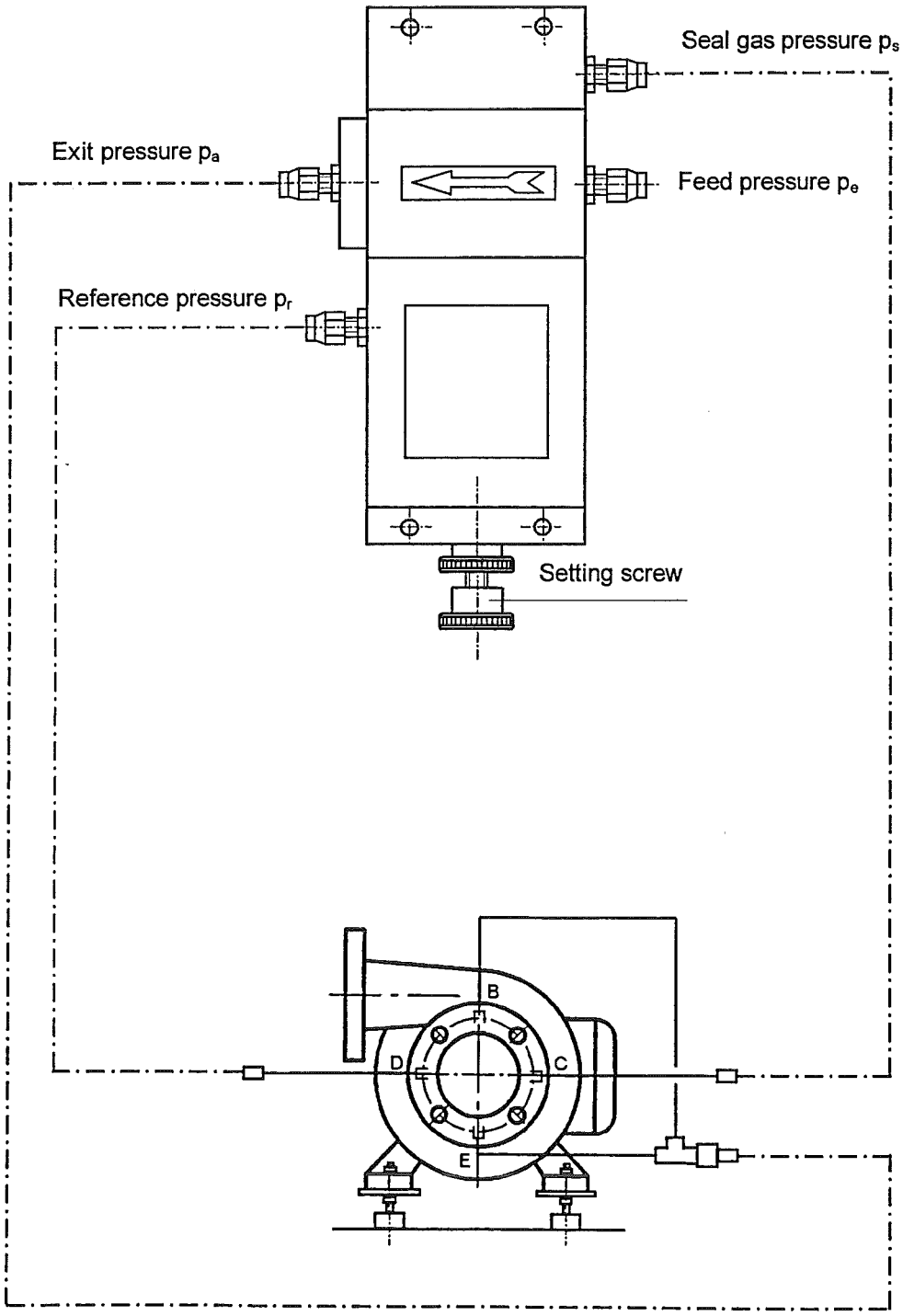

Description

The flowmeter V100 is used to measure small amounts of gas and liquids. The position of the float, in suspense in a calibrated metering tube, shows the momentary flowrate.

Design features

- Rigid Aluminium design for execution A
- Guaranteed stability of the floats
- Standard measuring range of 10:1
- Baked scales with contrasting background
- Simple exchange of the metering tube
- The flowmeter can be equipped with a limit switch. (ring sensor)

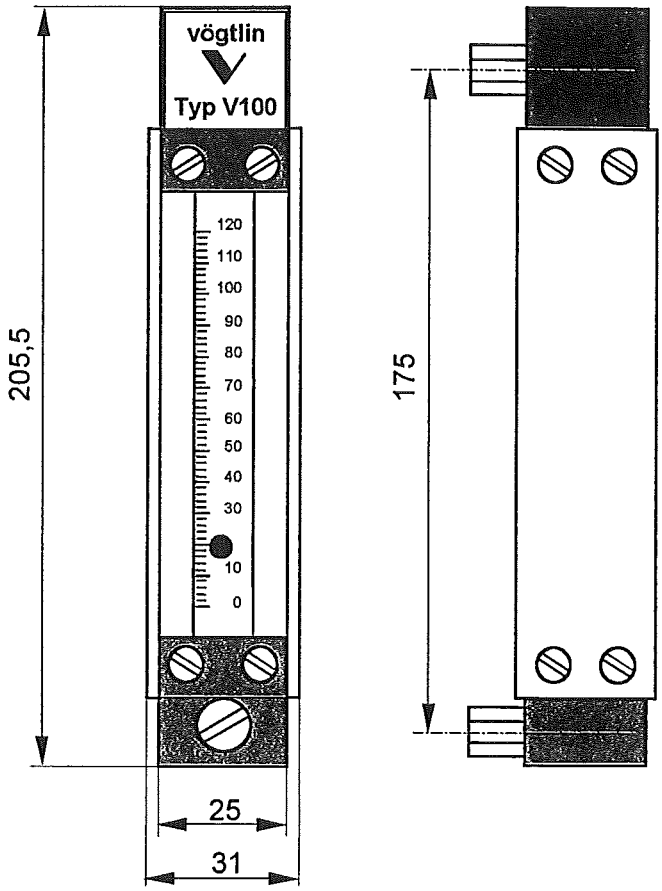

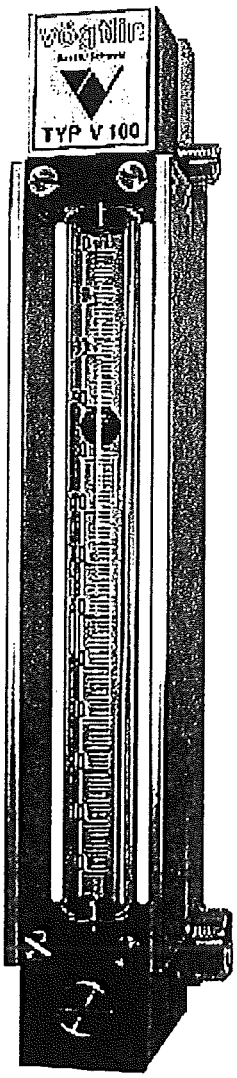

Type	V100-140
Execution	"A" Aluminium
Accuracy	± 2%
Glass-length (mm)	140
Scale-length (mm)	100/120
Fitting length (mm)	175
Float	ball
max. allowable pressure (bar)	16
max. Temperature (°C)	100
Connection	R1/4"
Pressure loss (mbar)	30

Inductive Sensor **Ring Type** **NAMUR** **2-wire**

Bistable

Direction detection

High feed speed
10 m/s

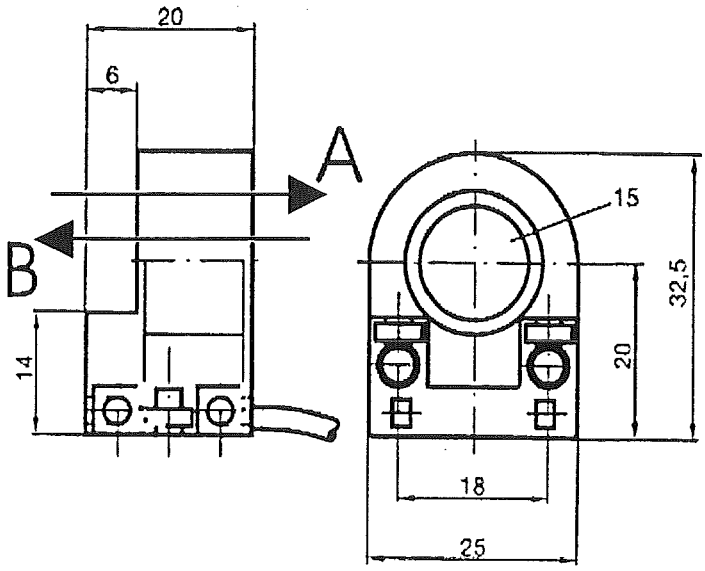

CE

Internal diameter	15 mm
Type	**RC15-14-N3**
Additional designation	**Y49839**
Measuring cylinder	Fe-metal
Diameter	3 mm
Length	4 mm
Nominal voltage	8 V
Current consumption	
Direction A	1 mA
Direction B	3 mA
Feed speed	10 m/s
Self inductance	70 µH
Self capacitance	90 nF
Output indicator	-
EMC to	EN 60947-5-2
In compliance with	EN 50227
Protection to IEC 60529	IP67
Operating temperature	-20 ...70 °C
Connection	2 m, PVC cable
Conductor cross section	0,14 mm^2
Housing material	PBT

Standard symbol, connection

N3

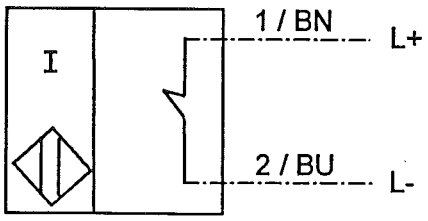

Transformer Isolated Barriers

KF-SR2-Ex1.W**
Output: Relay

- 1-channel
- Control circuit EEx ia IIC
- Reversible mode of operation
- 1 signal output with 1 changeover contact
- EMC acc. to NAMUR NE 21

24 V DC:

KFD2-SR2-Ex1.W
replaces model KFD2-SR-Ex1
115 V AC:

KFA5-SR2-Ex1.W
230 V AC:

KFA6-SR2-Ex1.W

Function

The transformer isolated barrier transfers digital signals from the hazardous area. Sensors per DIN EN 60947-5-6 (NAMUR) or mechanical contacs may be used as alarms. The control circuit is monitored for lead breakage (LB).
AC units have a low heat build-up due to voltage peak value generation. This switching technique has been patented. The input is safely isolated from the output and the power supply in accordance with DIN EN 50020. The output and power supply are safely isolated from each other in accordance with DIN VDE 106 Section 101.

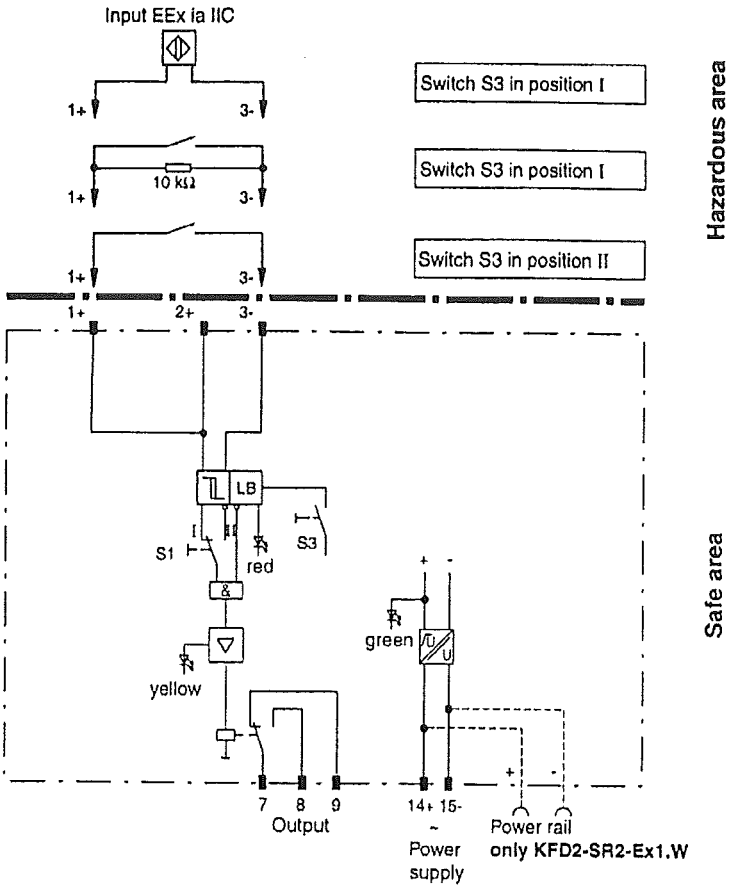

Aufbau

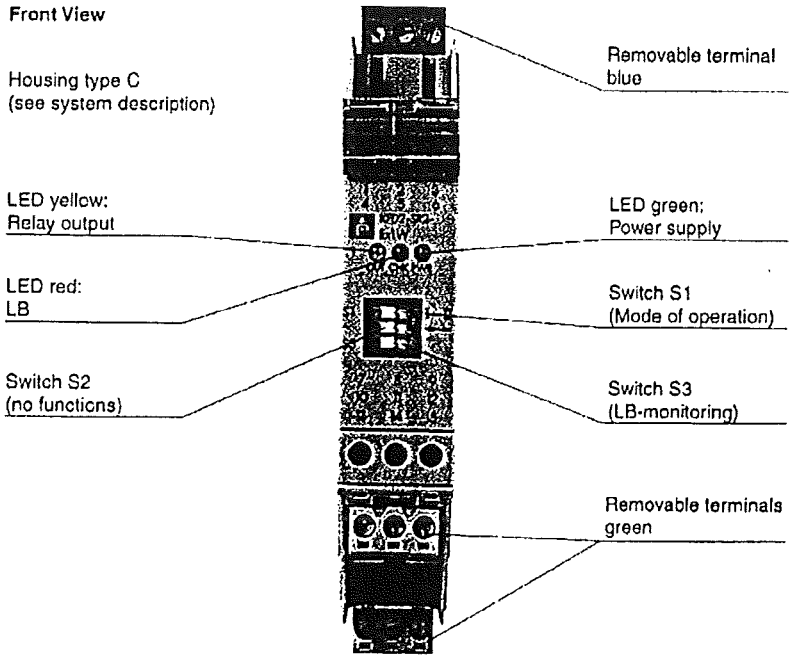

Technische Daten

KF**-SR2-Ex1.W

	KFD2-SR2-Ex1.W			KFA5-SR2-Ex1.W			KFA6-SR2-Ex1.W		
Power supply									
Connection type	Power Rail or terminals 14+, 15-			terminals 14, 15			terminals 14, 15		
Rated operational voltage U_0	20 ... 30 V DC			103.5 ... 126 V AC, 45 ... 65 Hz			207 ... 253 V AC, 45 ... 65 Hz		
Safety maximum voltage U_m	40 V DC			126.5 V DC			253 V DC		
Ripple	≤ 10 %			-			-		
Rated operational current	20 ... 23 mA			-			-		
Power consumption	-			≤ 1 W			≤ 1 W		
Input (intrinsically safe)									
Connection type	terminals 1+, 3-								
Nominal data	in accordance with IEC 60947-5-6 (NAMUR, DIN 19234); see system description for electrical data								
Input pulse length/Input pulse interval	≥ 20 ms / ≥ 20 ms								
Lead monitoring	breakage J ≤ 0.1 mA								
Details of certificate of conformity									
Certification number	PTB 00 ATEX 2080; for additional certifications refer to the approval list			PTB 00 ATEX 2081; for additional certifications refer to the approval list			PTB 00 ATEX 2081; for additional certifications refer to the approval list		
Group, category, ignition protection method	Ⓔx II (1) G D [EEx ia] IIC			Ⓔx II (1) G D [EEx ia] IIC			Ⓔx II (1) G D [EEx ia] IIC		
Voltage U_0	10.5 V			10.6 V			10.6 V		
Current I_0	13 mA			19.1 mA			19.1 mA		
Power P_0	34 mW			51 mW			51 mW		
Allowable circuit values									
Ignition protection class, category [EEx ia and EEx ib]									
Explosion group	IIA	IIB	IIC	IIA	IIB	IIC	IIA	IIB	IIC
External capacitance	75 µF	16.8 µF	2.41 µF	72 µF	16.2 µF	2.32 µF	72 µF	16.2 µF	2.32 µF
External inductance	1000 mH	840 mH	210 mH	780 mH	390 mH	97 mH	780 mH	390 mH	97 mH
Output (not intrinsically safe)									
Connection type	terminals 7, 8, 9								
Output	signal; relay								
Contact loading	253 V AC / 2 A / cos φ > 0.7; 40 V DC / 2 A resistive load								
Mechanical life	10^7 switchings								
Energized/De-energized delay	approx. 20 ms / approx. 20 ms								
Transfer characteristics									
Switching frequency	< 10 Hz								
Galvanic isolation									
Input/Output	safe galvanic isolation acc. to EN 50020, voltage peak value 375 V								
Input/Power supply	safe galvanic isolation acc. to EN 50020, voltage peak value 375 V								
Output/Power supply	safe isolation acc. to DIN VDE 0106, design isolation voltage 253 V_{eff}								
Ambient conditions									
Ambient temperature	-20 ... 60 °C (253 ... 333 K)								
Standard conformity									
Input	in accordance with IEC 60947-5-6 (NAMUR, DIN 19234); see system description for electrical data								
Coordination of insulation	accord. to DIN EN 50178								
Galvanic isolation	accord. to DIN EN 50178								
Climatic conditions	accord. to DIN IEC 721								
Electromagnetic compatibility	accord. to EN 50081-2 / EN 50082-2, NAMUR NE 21								
Mechanical specifications									
Mass	approx. 150 g								

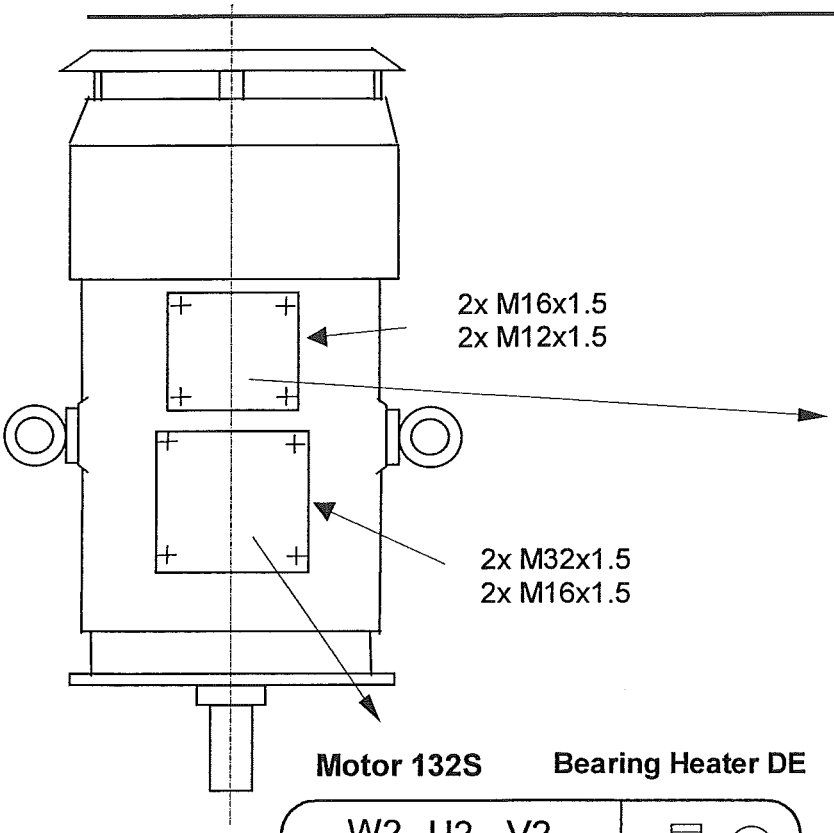

Survey (RTD's)

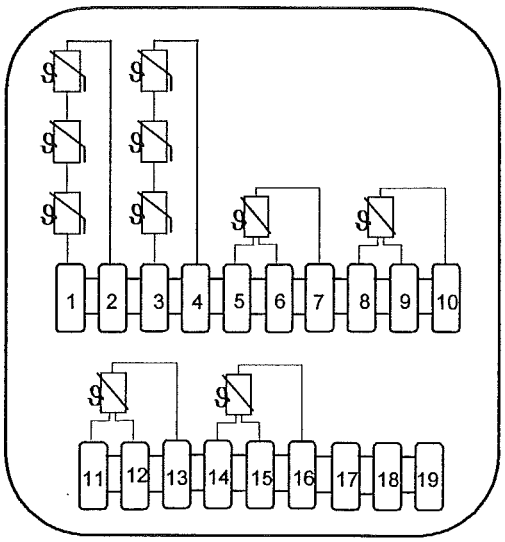

Motor 132S **Bearing Heater DE**

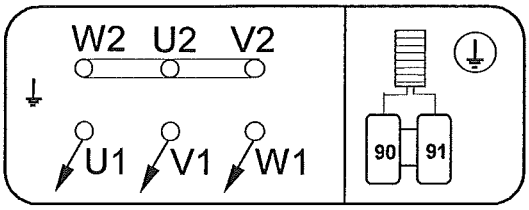

Y-Connec. 400V / 81Hz / 3 / 7,5KW 230V / 50Hz / 1 / 40 W

Wiring-Table

1-2	PTC alarm	Winding	ISO F
3-4	PTC disconnecting	Winding	ISO F
5-6-7 8-9-10	Temperature Detector RTD	Bearing DE	Dual
11-12-13 14-15-16	Temperature Detector RTD	Seal leakage detection	Dual
17-18-19	Spare		
90-91	Bearing heater	Bearing DE	

!	**RTD :**	Measuring current: 1 mA
!	**PTC thermistor sensors :**	Do not apply more than 2,5V !

0	16.02.2005	WP	
REV	DATE	DWG	CHECKED

Air Liquide AGS GmbH
Order Nr. 4500023387
Tag Nr, **P71100 – P71200**
Project name : ASU Kosice

Temperaturüberwachung E-Motor
Motor temperature control
Protection thermique du moteur

Der Motor *kann* mit folgenden Fühlern ausgerüstet sein :
The motor *can* be equipped with the following sensors :
Le moteur *peut* être équipé des sondes suivantes :

Messstelle	**Fühler Typ**	**Schaltpunkt** Werte können von Hersteller zu Hersteller leicht ändern	**Empfohlene Schaltpunkte** Alarm Zwischenwerte können nach belieben gesetzt werden
Control point	**Sensor type**	**Trip point** Values can change slightly by different manufacturers	**Recommended set point** Alarm points can be set in between upon need
Point de contrôle	**Type de sonde**	**Température de commutation** Ces valeurs peuvent différer légèrement suivant le fabricant du moteur	**Réglage recommandé** Les points d'alarme peuvent être placés au choix entre ces extrêmes

Lager AS	PT100		-40°C .. +120°C
Bearing DE	RTD		
Palier entraînement	PT100		

Lager BS	PTC	max. +120°C	
Bearing NDE	Thermistor		
Palier ventilateur	Thermistor		

Lager BS	PT100		-40°C .. +120°C
Bearing NDE	RTD		
Palier ventilateur	PT100		

Wicklung	PTC	Isolationsklasse F Alarm : +130°C Abschaltung : +150°C	
Winding	Thermistor	Insulation class F Alarm : +130°C Trip : +150°C	
Bobinage	Thermistor	Isolation svt. F Alarme : +130°C Arrêt : +150°C	

E-Motor 132S – 7,5 kW

Air Liquide AGS GmbH
Order- Nr. : 4500023387
Tag- Nr. : **P71100 – P71200**
Project Name: „ ASU Kosice "

Nominal Power	7,5	[kW]	
Nominal Speed	4700	[min.$^{-1}$]	(Operating range : 4500 – 5400)
Nominal Frequency	81	[Hz]	(Operating range : 78 – 92)
Nominal Voltage	400	[V]	

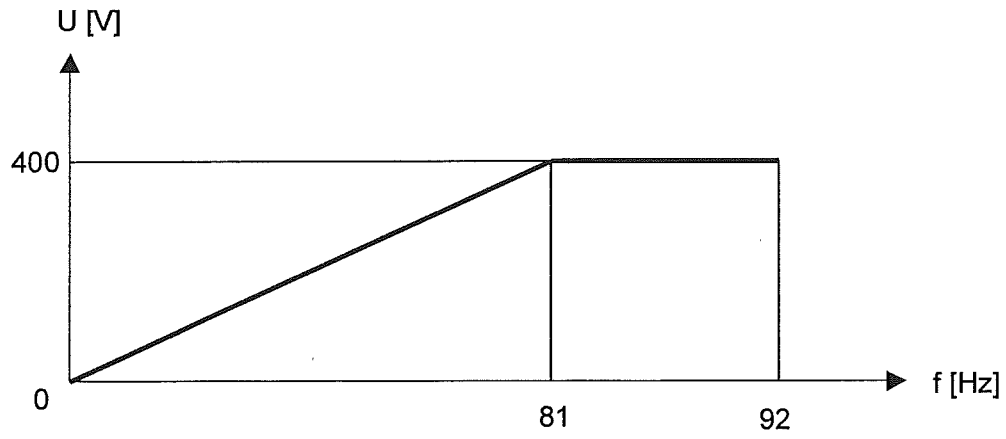

Pump Type	CL4-13 / EM-7,5	Nominal Power	7,5 [kW]	Nominal Speed	4700 [rpm]
Customer-Ref.	***Air Liquide AGS GmbH*** Order- Nr. : 4500023387 Tag- Nr. : **P71100 – P71200** Project Name: „ ASU Kosice “				

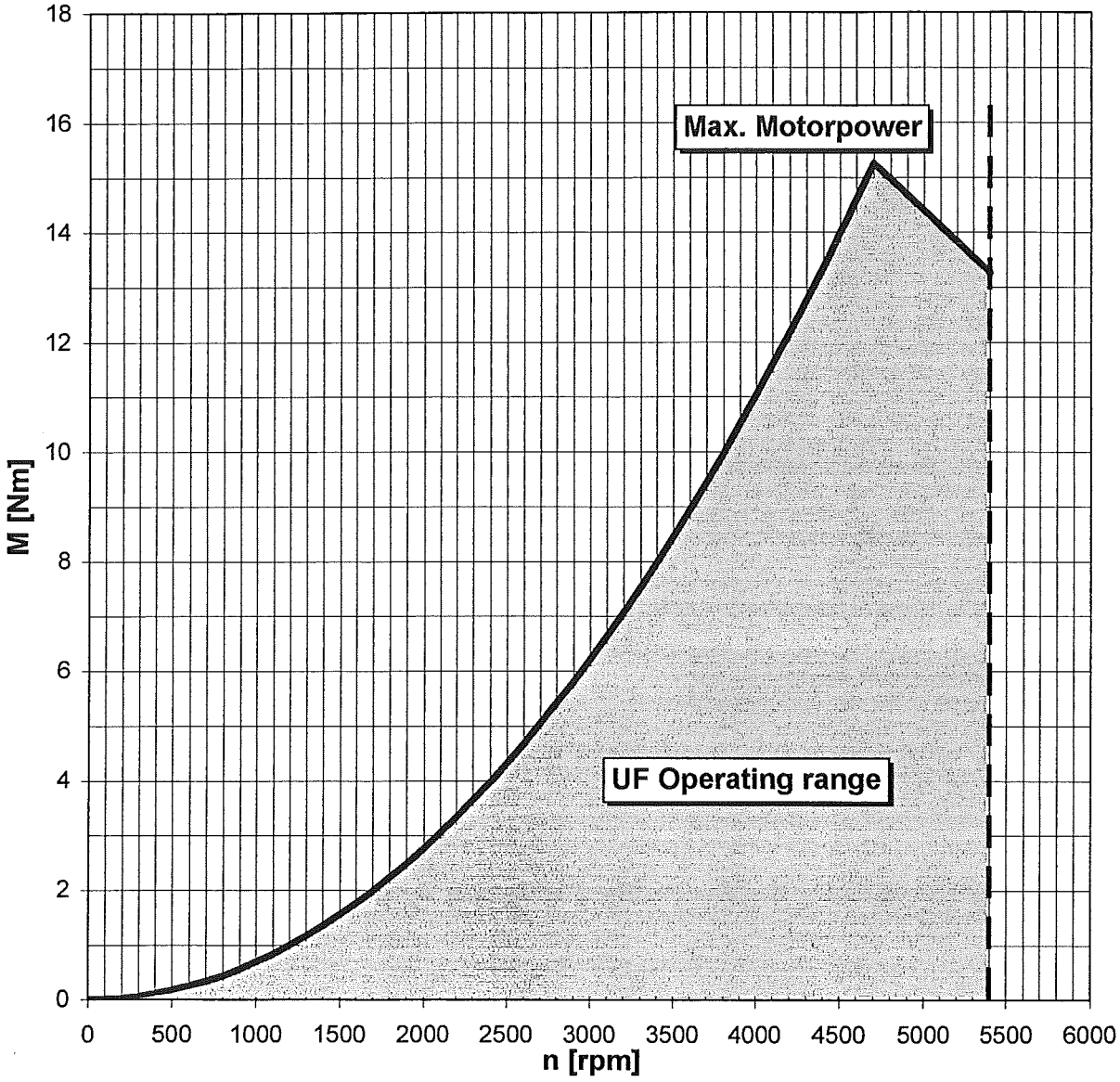

Treephase Induction Motors
Type DDA/DDG

Mounting & Maintenance

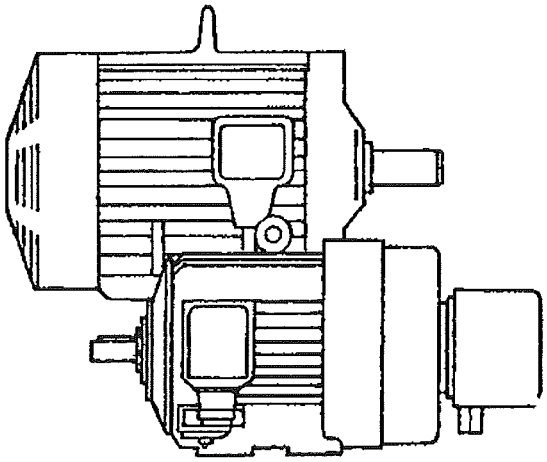

www.halter-motoren.de
e-mail: info@halter-motoren.de

THREEPHASE INDUCTION MOTORS TYPE DDA/DDG

- MOUNTING & MAINTENANCE -

TABLE OF CONTENTS page

		page
1	General information	2
2	Delivery	2
3	Mounting	2
4	Coupling	2
	4.1. Direct coupling	2
	4.2. Indirect coup	3
	4.2.1. Flat belt or V belt	3
	4.2.2. Spur gear transmission	3
	4.3. Shaft couplings	3
5	Electrical connections	4
	5.1. General information	4
	5.2. Circuit detail	4
6	Putting into service	5
7	Maintenance	5
	7.1 Dust	5
	7.2 Moisture	5
	7.3 Wear & vibrations	5
	7.4 Greasing	6
	7.5 Replacement of ball or roller bearing	6
8	Bearing types and inner diameter of bearing	7
9	Grease-interval Bearings	8
10	Motor spare part list / drawing	9

1. GENERAL INFORMATION

This manual concerns normal three phase induction motors with an output varying from small to middle size; they are externally cooled, totally enclosed, supplied in a cast iron frame and provided with ball bearings or roller bearings lubricated with grease.

2. DELIVERY

After receipt, remove the package material if any and mind the parts that have been delivered loose. In the case of unpacked motors, the glands are often put in the terminal box to protect them against damage.

Check the motor to see whether transport damage has occurred.
You should be able to rotate the shaft easily and smoothly with the hand.

Compare the details on the rating plate with those of the power network and with the requirements of the motor.

3. MOUNTING

The motor must be fixed on a stable, clean and flat foundation with good fitting foundation bolts, using washers.
Never mount a motor manufactured for a horizontal mounting on a surface with an angle of inclination of more than 15 degrees without consulting the supplier in advance.

Foot & flange motors always have to be mounted in such a way that the drain holes, if any, are situated at the bottom, otherwise you run the risk that moisture has condensed into the motor and cannot be drained off. To this end you need to remove the drain plugs.

Under no circumstance must the free flow of air be obstructed to the cooling fan or the motor will overheat.
This has also to be borne in mind when you are mounting motors in enclosed spaces of small size.
The ambient temperature must not exceed 40 degrees centigrade, unless otherwise agreed upon at the time of ordering.

4. COUPLING

4.1 Direct coupling

The motor and driven shafts must be accurately aligned. In case of a flexible coupling, the manufacturers distance between the parts to be coupled must be adhered to, also the degree of misalignment must be within the makers tolerance. We do not recommend using solid couplings.

4.2 Indirect coupling

4.2.1. Flat or V Belts

Mount the motor on slide rails in order to adjust belt tension.
The belt pulley has to be fitted hard up the shoulder of the shaft. The pulley center line should be within the shaft center line. Use correctly sized belts with a correct profile and in sufficient numbers to drive without slip and undue tension. Align both pulleys accurately in such a way that the center of both pulleys are in line.
Multi V belt drives need to be matched sets.

A belt pulley, which is either too small or too wide, or too high, a tension on the belt may damage the bearing or cause a shaft break.
In case of doubt, consult the supplier.

4.2.2. Spur Gear Drives

The motor and the driven machine have to be positioned in such a way that the two gears mesh correctly. The motor should then be fixed with dowels.

4.3. Shaft couplings and pulleys etc.

Remove the corrosion protection from the shaft extension and the coupling elements. The coupling parts, belt pulleys and gear wheels need to be dynamically balanced and fit easily on the shaft and to be provided with good fitting keyway.

In the factory the rotor has already been dynamically balanced including a half key in the shaft.

The dimension and the tolerances of the shaft extension and the key are indicated on the motor dimension sheet.

Assembling the coupling elements has to been done with great care. Careless handling may damage the bearings, shaft or end shields.

Do not file or emery the shaft to achieve a fit!

hen fitting pulleys couplings or bearings, we recommend using heat to elements; therefore the part to be mounted has to be heated till ± 80 degrees above the ambient temperature.

A large washer and set screw can be useful for pushing on pulleys using the tapped hole in the shaft. Only use proper tools for removing the above mentioned parts e.g. pulley drawers.

5. ELECTRICAL CONNECTION

5.1. General information

On delivery the motor will rotate clockwise looking at the drive when the phases L1, L2 and L3 are connected respectively to the connection terminals U1, U2 and U3.
Exchanging any two-phase lines can change the direction of rotation.
When a motor is only suited for one direction of rotation, it is indicated with an arrow on the motor fan cowl.

Connecting cables must conform to IEE regulations, as must earthing requirements.
Line fuses only protect the cables in case of short–circuiting and do not constitute a safeguard against the overheating of the winding caused by overload. Therefore it is recommended that a motor starter and overload is fitted, giving single phasing and overload protection.

5.2. Circuit

Normally our motors are provided with a terminal box with six connections, to which six leads from the winding are connected either in a delta connection or in a star connection by means of connection links.

Usually two voltages are indicated on the rating–plate of these motors, which means that the motor can be connected to a circuit having one of these voltages.
If the mains voltage is corresponding with the lowest indicated voltage, the winding has to be connected in delta connection (see figure 1); if it is corresponding with the highest indicated voltage, the winding has to be connected in star connection (see figure 2).

A motor with e.g. 230/400 V on its rating–plate is suited to be switched on directly, on a circuit with a voltage of 230 V between phases with the winding connected in a delta connection, or on a circuit with a voltage of 400 V with the winding connected in a star connection.

But if the motor is switched on with a star–delta starter the motor is only suited for a mains voltage on the rating-plate, this is the delta voltage. In this case, the connection strips on the terminal box have to be removed when the motor is connected; the star and delta connection will be made successively in the starter during the run up.
If only one voltage is indicated on the rating–plate together with the delta sign, the motor can be switched on directly at the indicated voltage or with a star/delta starter.

Pole change motors (for two or more speeds) are connected according to a diagram sent together with the motor.

6. PUTTING INTO SERVICE

Before putting a motor into service, one should check especially when the motor has not been used for a long time that the insulation resistance of the winding is sufficient. The insulation resistance has to be at least 10 meg/ohms on a 1000V megger.
If the insulation resistance is not high enough, the motor has to be dried out and revarnished or rewound.
Check all connections and adjust the thermal protection units to the correct current. Switch the motor on in a no load state to determine the direction of rotation. Load the motor gradually and check whether it runs without vibration.

The motor can be used under deviation of the main voltage ± 5% or frequency of max. ± 2% compared to the nominal frequency or nominal voltage, in compliance with the international regulations for electric machines.

7. MAINTENANCE

The totally enclosed and fan cooled three phase squirrel cage induction motors require very little maintenance.
Nevertheless it is recommended to check the motor regularly in order to prevent a breakdown caused by dust, moisture, vibrations, too much or too little greasing.

7.1. Dust

The outer parts of the totally enclosed motors, especially the cooling ribs or cooling channels, have to be kept as clean as possible in order not to obstruct the cooling air from the fan extracting the heat from the motor frame.

7.2. Moisture

Motors, which are not often run, should be started from time to time to prevent moisture affecting the windings in the long term.

7.3. Wear & vibration

To prevent abnormal wear & vibration, one should:

a. take care that the tension of the belt or the chain is not too high;
b. check whether the mounting of directly coupled machines is correct;
c. Check whether the foundation bolts the bolts to fasten the motor and the slide rails are tight.

7.4. Greasing

Before they leave the factory, the bearings of the HALTER Motors are filled with a high quality Lithium base grease.

The sizes 56 up to and including 250 are provided with shielded/sealed bearings (ZZ-C3), witch have been filled with life-time grease by the manufacture of the bearings.

Motors with sealed bearings and no re-lubrication system require no maintenance other than checking for noise & temperature during their lifetime.
Sizes 280 up to and including 400, has been provided with a permanent lubrication system containing a grease valve.
The lubrication must take place when the machine is running.
The old grease is ejected from the grease valve thus maintaining the correct level and avoiding overfilling which would be harmful.

7.5. Replacement of ball or roller-bearings

When a bearing has to be replaced, the old bearing has to be removed from the shaft with proper tools in order not to damage the shaft. Thereupon the bearing location on the shaft has to be cleaned and checked thoroughly.

To fit a new bearing correctly, heat to 80 – 90 degrees centigrade with an electric induction heater, then slip quickly onto the shaft up to the stop. In the case of a roller bearing only fit the inner race in this manner.

A suitable sleeve may be used to help by tapping gently to seat the bearing home. Note that under no circumstances must a bearing be driven home cold with excess force. We must also stress that pressure must not be applied to the outer race of a ball bearing.

Do not mount the end shield until the bearing has cooled down.

8. Bearing type and bearing inside diameter

! Only for standard motors

HALTER Motor type	Poles	type of bearing Driven end	Non Driven end	Bearing inside diameter(mm)
DDA-56	2/4	6201 ZZ C3	6201 ZZ C3	12/12
DDA-63	2/4	6202 ZZ C3	6202 ZZ C3	15/15
DDA-71	2/4/6	6203 ZZ C3	6202 ZZ C3	17/15
DDA/DDG-80	2/4/6/8	6204 ZZ / 6204 ZZ C3	6204 ZZ / 6203 ZZ C3	20/20/20/17
DDA/DDG-90	2/4/6/8	6205 ZZ / 6205 ZZ C3	6205 ZZ / 6204 ZZ C3	25/25/25/20
DDA/DDG-100	2/4/6/8	6206 ZZ / 6206 ZZ C3	6206 ZZ / 6206 ZZ C3	30/30/30/30
DDA/DDG-112	2/4/6/8	6306 ZZ / 6306 ZZ C3	6306 ZZ / 6306 ZZ C3	30/30/30/30
DDA/DDG-132	2/4/6/8	6308 ZZ / 6308 ZZ C3	6308 ZZ / 6308 ZZ C3	40/40/40/40
DDG-160	2/4/6/8	6309 ZZ C3	6309 ZZ C3	45/45
DDG-180	2/4/6/8	6311 ZZ C3	6311 ZZ C3	55/55
DDG-200	2/4/6/8	6312 ZZ C3	6312 ZZ C3	60/60
DDG-225	2/4/6/8	6313 ZZ C3	6313 ZZ C3	65/65
DDG-250	2/4/6/8	6314 ZZ C3	6314 ZZ C3	70/70
DDG-280	2	6314 C3	6314 C3	70/70
DDG-280	4/6/8	6317 C3	6317 C3	85/85
DDG-315	2	6317 C3	6317 C3	85/85
DDG-315	4/6/8	6319 C3	6319 C3	95/95
DDG-355	2	NU317	6317 C3	85/85
DDG-355	4/6/8	NU322	6320 C3	110/100
DDG-400	4/6/8	NU326	6326 C3	130/130

Figure 1

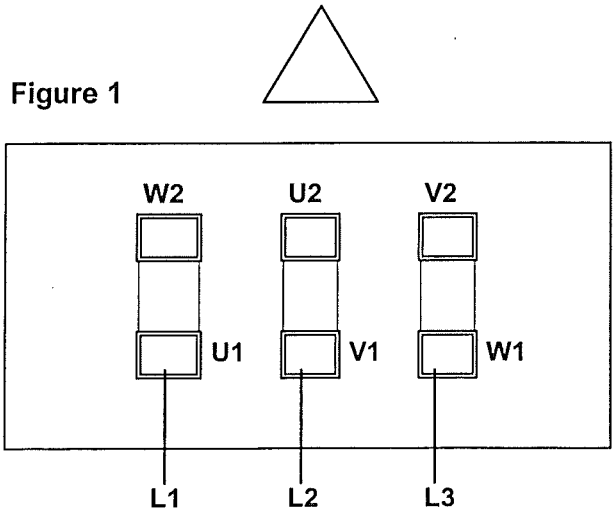

Figure 2

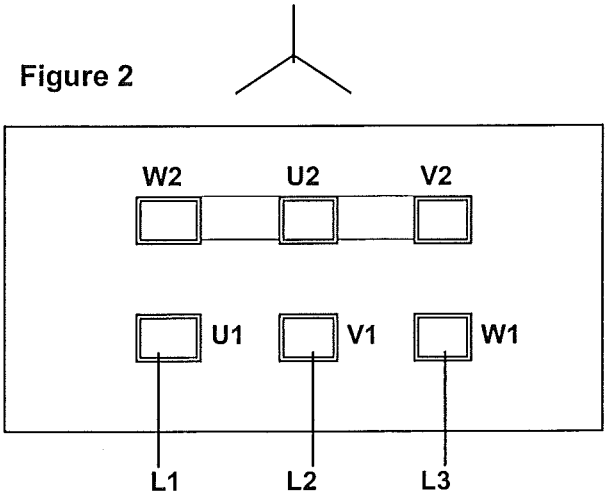

9 Grease-interval Bearings

By the term "greasing interval" we mean the number of working hours after which the bearing lubricant has to be replaced.

Electric motors have such a wide range of application that they must cope with many adverse conditions as for instance dust, moisture, vibration, temperature, chemicals, marine atmosphere and of course, the mounting position and loading of the driven machine.
Generally we can say lubrication life is a product of time, speed and the bearing size. Due to the impact of all these factors, it is practically impossible to determine any exact values that are valid under all circumstances. Nevertheless it is necessary to provide at least some guidelines concerning greasing to the user.

Under normal load and environmental conditions the quality of the grease ensures proper operation of the motor for about 10000 service hours with 2-pole designs and 20000 service hours with multi pole designs. If not otherwise agreed upon the grease need not be refilled during this period. Nevertheless the condition of the grease filling should be occasionally checked also within the said lubricating intervals.
The stated service hours are only current under operation with rated speed. For relubrication thoroughly clean the bearings with a suitable solvent and use the same or substitute grades specified by the motor manufacturer. Bear in mind, however, that the bearings should be filled only up to about 2/3 of their free space as a complete filling of the bearings and bearing covers results in an increased bearing temperature and therefore in increased wear. For bearings with relubricating facility regrease at the grease fitting with the motor running according to the grease amount required for the motor in case. The relubrication intervals should be looked up in the following table:

A chemically aggressive environment, extreme moistness, strong vibrations, high or low ambient temperatures are not normal circumstances and such conditions must be taken into account.

Motortype	Bearing	Grease	Regreasing	Amount
DDA132 SB2	2 x 6308 Z P6 CN	Klüber Isoflex Alltime SL 2	5000 h	6,3 – 7,6

Motor Type:	DDA 132 SB2
Customer:	Sefco AG
Motor – No:	05038542 / 43
Output Power:	7,5 Kw
Speed:	4700 min/1
Voltage:	230 / 400 V
Frequency:	81 Hz
Full - load power factor:	0,90
Connection:	Star
Rated current at 230 / 400 V	23,9 / 13,8 A
Full – load efficiency	87,4
Protection class	IP 55
Insulation class	F to be of use B
Operating mode	S1 / S9
Constuction type	IMV 1
Weight	49 kg

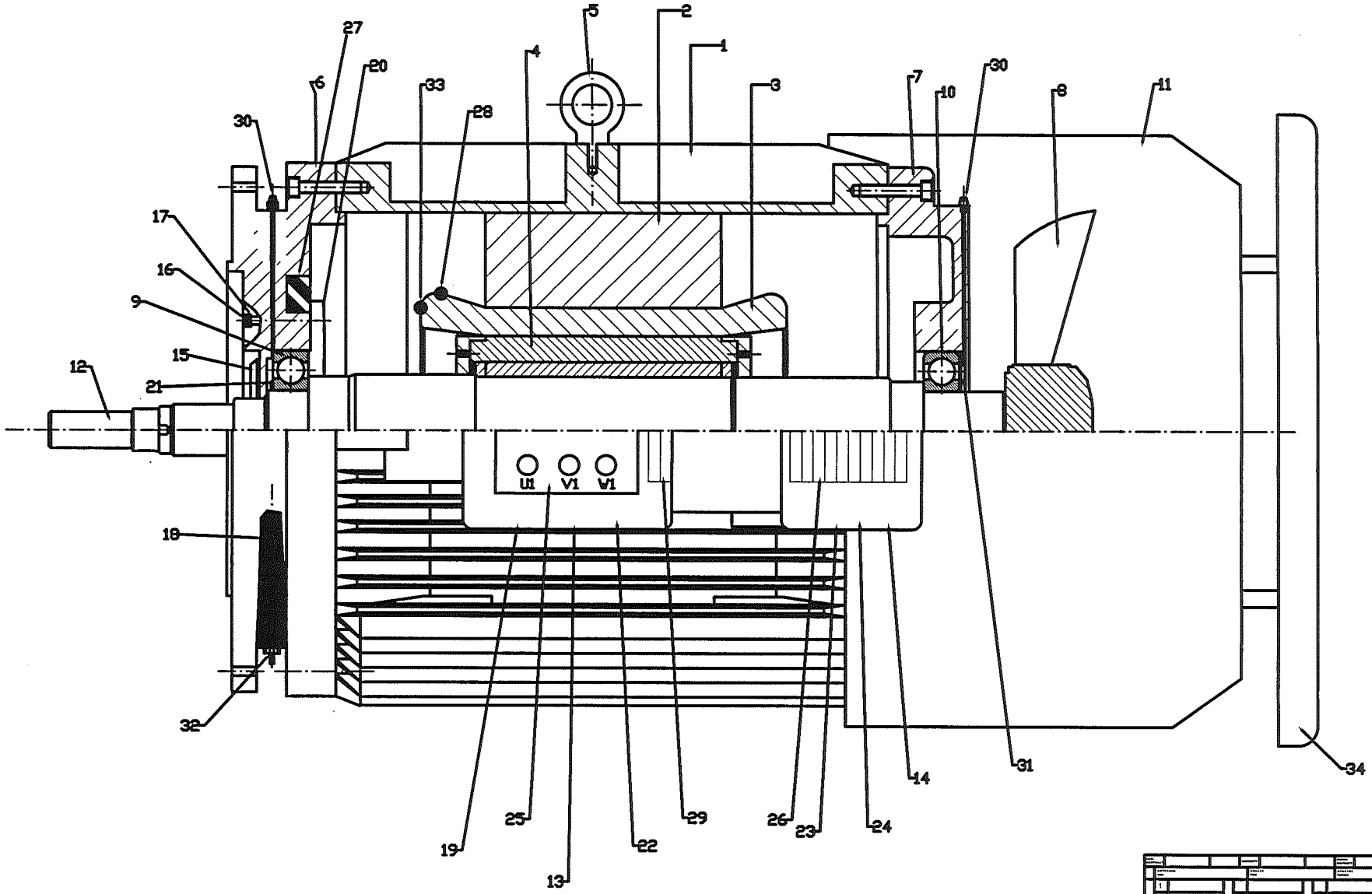

					OHNE SEP.STUCKLISTE
					SEP.SL GLEICHER NR.
					SEP.SL ANDERER NR.
					ÜBERNEHMENDE STELLE
					ZUST.STELLE
					DOK.-ART: A / FORMAT: 1 / SPRACHE / BL.-NR. / ANZ.BL.
					TITEL

Motor – No. 05038542 / 43
DDA 132 SB2

Spare - List

Pos.	indication	marking	pieces	Supplier/norm
1	Stator – frame	DDA 132 SB2	1	Halter – Germany
2	Stator	DDA 132 SB2	1	Halter – Germany
3	Winding	DDA 132 SB2	1	Halter – Germany
4	Rotor	DDA 132 SB2	1	Halter – Germany
5	Eye – bolt	M10	1	DIN 580
6	Drive – end –shield	05 / 2780 - 2	1	B5 / 250
7	None – drive-end shield	DDA 132 SB2	1	LS – BS
8	Fan	MEC 100	1	Halter – Germany
9	Drive-end-bearing	6308 Z – P6 CN	1	Halter – Germany
10	None-drive-end-bearing	6308 Z – P6 CN	1	Halter – Germany
11	Fan cowl	DDA 132 SB2	1	Halter – Germany
12	Shaft	05 / 2778 – 3	1	1.4057 / C45
13	Terminal box	DDA 132 SB2	1	Halter – Germany
14	Terminal box survey	DDA 132 SB2	1	Halter – Germany
15	V - Ring	RB40	1	Halter – Germany
16	Screw	M6 x 55	4	DIN 912
17	Seal	TM 106	4	
18	Temperatur Detector	PT100, duplex	1	Halter – Germany
19	Cable gland	M32 x 1,5	2	PVC
20	Drive end inner bearing cap	95 / 792 - 3	1	Halter – Germany
21	Safeguarding Ring	A 40	1	DIN 471
22	Cable gland	M16 x 1,5	2	PVC
23	Cable gland	M16 x 1,5	2	PVC
24	Cable gland	M12 x 1,5	2	PVC
25	Terminal board	DDA 132 SB2	1	Halter – Germany
26	Clip survey	AKZ 4	19	Weidmüller - Germany
27	Bearing heater	40 W, 230V	1	Halter – Germany
28	Temperature detector	155°	3	Halter – Germany
29	Clip Bearing Heater	AKZ 4	2	Weidmüller - Germany
30	Lubrication nipple	H1	2	Halter - Germany
31	Spring washer	KAS 89	1	Halter – Germany
32	Stopper	M10 x 1	1	DIN 910
33	Temperature detector	130°	3	Halter – Germany
34	Porch	DDA 132 SB2	1	Halter – Germany

Certificates

sefco	Delivery Certificate	Ref. Nr.: 05.044/1

Customer:	Air Liquide AGS GmbH - 4500023387 - ASU Košice - K70101		P71100
Pump Type:	CL4-13 / EM-7,5		
Motor:	Manufacture : Halter	Type: DDA132SB2F-AS	Nr.: 05038542
	P: 7,5 [KW]	U: Y 400 [V]	I: 13,8 [A]
	n_{range}: 4500-5400 / f_{range}: 78-92 [Hz]		$f_{field\ weakening\ point}$: 81 [Hz]
Pressure Test (EN 13275:2000/§5.2.2)	Hydraulic pressure test of pump casing completed at 45 bar for 5 min.		
	Date: 06.04.05	Signature: AK	
Degreasing (EN 12300:1999)	Pump cold end has been degreased with Trichlorethylen for LOX operation.		
	Date: 12.05.05	Signature: GB	

LIN-Test

γ 0.7692 [daN/l]

Q [l/min]	p_{suct} [barg]	p_{del} [barg]	Δp [bar]	ΔH [m]	P_{el} 1) [kW]	$P_{mech.}$ [kW]	η_{pump} [%]	T [°C]	n [rpm]	$f_{Converter}$ at operation [Hz]
60	1.42	21.10	19.68	255.9	6.8			-190.7	4858	84
80	1.42	21.00	19.58	254.6	7.6			-190.7	4858	84
101	1.43	20.10	18.67	242.7	8.5			-190.7	4858	84
110	1.43	19.45	18.02	234.3	8.8			-190.7	4858	84
120	1.43	18.30	16.87	219.3	9.3			-190.7	4858	84
130	1.44	17.20	15.76	204.9	9.8			-190.7	4858	84

1) P_{el} measured at converter inlet

Labyrinth Seal

(measured at 101 l/min, 4858 rpm)

Sealgas:	Gaseous nitrogen at approx.15°C
Measure "A":	mm
Feed pressure:	5 barg
Reference pressure:	1.4 barg
Sealgas pressure:	1.44 barg
Sealgas flowrate:	31 mm = 3,4 Nm3/h

Remarks: Seal leakage, motor DE bearing RTD's, motor winding PTC thermistors and bearing heater: functional check OK

Impeller diam at test:	4x 130 mm
Tip width:	3,8 mm
With Inducer	yes
With blade-ring	yes
Diffusor type:	90
Orifice ∅ :	
Δp regulator No:	394

Vibrations: (at DE motorshield) 0.7 [mm/s]

(at 101 l/min)

0.6 [mm/s]

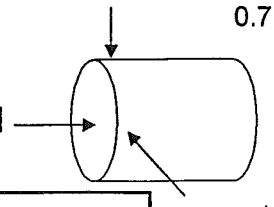

1 [mm/s]

Sound pressure level (at 101 l/min)

77.3 dB(A)

	Date : 26.05.05	Signature: B. Gutknecht

sefco	Delivery Certificate	Ref. Nr.: 05.044/2

Customer:	Air Liquide AGS GmbH - 4500023387 - ASU Košice - K70101		P71200
Pump Type:	CL4-13 / EM-7,5		
Motor:	Manufacture : Halter	Type: DDA132SB2F-AS	Nr.: 05038543
	P: 7,5 [KW]	U: Y 400 [V]	I: 13,8 [A]
	n_{range}: 4500-5400	/ f_{range}: 78-92 [Hz]	$f_{field\ weakening\ point}$: 81 [Hz]
Pressure Test (EN 13275:2000/§5.2.2)	Hydraulic pressure test of pump casing completed at 45 bar for 5 min.		
	Date: 06.04.05	Signature: AK	
Degreasing (EN 12300:1999)	Pump cold end has been degreased with Trichlorethylen for LOX operation.		
	Date: 12.05.05	Signature: GB	

LIN-Test

γ 0.7683 [daN/l]

Q [l/min]	p_{suct} [barg]	p_{del} [barg]	Δp [bar]	ΔH [m]	P_{el} 1) [kW]	$P_{mech.}$ [kW]	η_{pump} [%]	T [°C]	n [rpm]	$f_{Converter}$ at operation [Hz]
60	1.25	21.10	19.85	258.4	7.1			-190.5	4871	84
80	1.25	21.00	19.75	257.1	7.8			-190.5	4871	84
101	1.25	20.10	18.85	245.3	8.6			-190.5	4871	84
110	1.25	19.55	18.30	238.2	8.7			-190.5	4871	84
120	1.25	18.55	17.30	225.2	9.2			-190.5	4871	84
130	1.25	15.50	14.25	185.5	9.5			-190.5	4871	84

1) P_{el} measured at converter inlet

Labyrinth Seal	(measured at 101 l/min, 4871 rpm)	
	Sealgas:	Gaseous nitrogen at approx.15°C
	Measure "A":	mm
	Feed pressure:	5 barg
	Reference pressure:	1.23 barg
	Sealgas pressure:	1.26 barg
	Sealgas flowrate:	33 mm = 3,7 Nm3/h

Remarks: Seal leakage, motor DE bearing RTD's, motor winding PTC thermistors and bearing heater: functional check OK

Impeller diam at test:	4x 130 mm
Tip width:	3,8 mm
With Inducer	yes
With blade-ring	yes
Diffusor type:	90
Orifice ∅ :	
Δp regulator No:	396

Vibrations: (at DE motorshield) 0.7 [mm/s]

(at 101 l/min)

0.4 [mm/s]

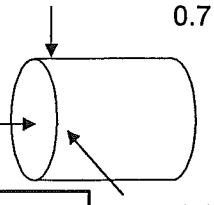

0.55 [mm/s]

Sound pressure level (at 101 l/min)

75.9 dB(A)

	Date : 26.05.05	Signature: B. Gutknecht

Angst+Pfister

Suction hose, item 6 on drawing
n° 05.044/14

Angst+Pfister AG
Thurgauerstrasse 66
CH-8052 Zürich
Postfach Hardhofstrasse 31
Telefon +41 1 306 61 11
Telefax +41 1 302 18 71

Angst+Pfister SA
Route du Bois-des-Frères 52
Case postale 19
CH-1219 Genève-Le Lignon
Téléphone +41 22 979 28 00
Téléfax +41 22 979 28 78

Lieferadresse / Adresse de livraison /
Delivery address:
Angst+Pfister AG – Logistikcenter

CH-8424 Embrach
Telefon +41 1 866 66 11
Telefax +41 1 866 66 22

Bankverbindung:
CS, 8050 Zürich, Kto. 570500-91, BC 4857
UBS, 8050 Zürich, Kto. 803.917.01J, BC 269

Customer No. 111219

Sefco AG
Herr F. Brodesser
Wuhrmattstr. 15

CH-4103 Bottmingen

Sefco AG
Maschinen-Anlagen
Wuhrmattstr. 15

CH-4103 Bottmingen

Official in Charge: Frau Ch. Schweri
Tel. direct: 044 306 64 05
23.05.05 13:12:59 /

Inspection certificate EN 10204-3.1 B FT-A05.292282

Your reference			Our reference
Herr Brodesser / Best.Nr. 05/2629			Frau Ch.Schweri
Job No.	Order Date	Delivery Date	VS
FT-A05.292282	11.03.2005	25.04.2005	A+P Zürich

Order specification/acceptance requierements:

Test item:	Our part-no 80.0003.6215 Metal hose assembly ASSIWELL® 100 1.4541 DN 40, U1, NL 445 mm Fitting 1: 30° elbow, welding flange DN 50 PN 16 Fitting 2: welding flange DN 40 PN 16 Your part/drawing-no. 3 14139
Quantity:	2 pieces
Marking:	A+P, ASSIWELL® 100 1.4541, 05/05, PS 16, A05.292282, 314139
Test:	Tightness Test (+20° C): 2 bar air / Duration: 1 min. Pressure Test (+20° C): 24 bar water / Duration: 1 min.
Test result:	The hose(s) meet(s) the requirements.
Remarks:	

Material certificate

Element	Material	Ladle No.
Corrugated hose	1.4541	0486309
Braid	1.4301	173356
30° Elbow	1.4404	L6194/4008960
Welding Flange DN 50 PN 16	1.4435	504626
Welding Flange DN 40 PN 16	1.4435	502744
Reduction	1.4435	500571

We hereby certify, that the material described above has been tested and complies with the terms of the order contract.

Best regards
Angst + Pfister AG

ppa. H. Birmele

i.A. Ch. Schweri

Angst+Pfister

Discharge hose item 11 on drawing
no 05.044/14

Angst+Pfister AG
Thurgauerstrasse 66
CH-8052 Zürich
Postfach Hardhofstrasse 31
Telefon +41 1 306 61 11
Telefax +41 1 302 18 71

Angst+Pfister SA
Route du Bois-des-Frères 52
Case postale 19
CH-1219 Genève-Le Lignon
Téléphone +41 22 979 28 00
Téléfax +41 22 979 28 78

Lieferadresse / Adresse de livraison /
Delivery address:
Angst+Pfister AG – Logistikcenter

CH-8424 Embrach
Telefon +41 1 866 66 11
Telefax +41 1 866 66 22

Bankverbindung:
CS, 8050 Zürich, Kto. 570500-91, BC 4857
UBS, 8050 Zürich, Kto. 803.917.01J, BC 269

Customer No. 111219

Sefco AG
Herr F. Brodesser
Wuhrmattstr. 15

CH-4103 Bottmingen

Sefco AG
Maschinen-Anlagen
Wuhrmattstr. 15

CH-4103 Bottmingen

Official in Charge: Frau Ch. Schweri
Tel. direct: 044 306 64 05
23.05.05 13:09:32 /

Inspection certificate EN 10204-3.1 B FT-A05.292282

Your reference			Our reference
Herr Brodesser / Best.Nr. 05/2629			Frau Ch.Schweri
Job No.	Order Date	Delivery Date	VS
FT-A05.292282	11.03.2005	24.05.2005	A+P Zürich

Order specification/acceptance requierements:

Test item:	Our part-no 80.0003.6197 Metal hose assembly ASSIWELL® 100 1.4541 DN 32, U1, NL 300 mm Fitting 1: 90° elbow, welding flange DN 32 PN 40 Fitting 2: welding flange DN 32 PN 40 Your part/drawing-no. 4 14867
Quantity:	2 pieces
Marking:	A+P, ASSIWELL® 100 1.4541, 05/05, PS 25, A05.292282, 414867
Test:	Tightness Test (+20° C): 2 bar air / Duration: 1 min. Pressure Test (+20° C): 38 bar water / Duration: 1 min.
Test result:	The hose(s) meet(s) the requirements.
Remarks:	

Material certificate

Element	Material	Ladle No.
Corrugated hose	1.4541	486310
Braid	1.4301	173356
90° Elbow	1.4432	E32678
Welding Flange DN 32 PN 40	1.4435	E40679

We hereby certify, that the material described above has been tested and complies with the terms of the order contract.

Best regards
Angst + Pfister AG

ppa. H. Birmele

i.A. Ch. Schweri

CERTIFICATE of CONFORMITY

Theo Halter GmbH
Elektromotoren
Gleisstrasse 36

68766 Hockenheim

The electrical apparatus:

Three phase asynchronous squirrel cage motors series:

DDG / DDA

are in conformity with the instructions of:

- 73 / 23 EWG
Low Voltage Directive amended by: RL 93 / 68 / EWG

- 89 / 336 / EWG
Directive on Electromagnetic Compatability
amended by: RL 91 / 263 / EWG, 92 / 31 / EWG and 93 / 68 / EWG

The conformity with the instructions of these directives is proved by the observation of the following standards:

1. IEC Publ. 34-1	Rating and performance NEN 3173; 1991
2. IEC Publ. 34-5	Degrees of protection (IP code) NEN-EN 60034-5
3. IEC Publ. 34-7	Classification of types of construction and mounting arrangements (IM code) NEN-EN 60034-7
4. IEC Publ. 34-9	Noise limits NEN-EN 60034-9
5. IEC Publ. 34-14	Limits of mechanical vibrations NEN 10034-14
6. IEC Publ. 34-8	Terminal markings and direction of rotation NEN 2248
7. IEC Publ. 72-1	Relationships of the dimensions and output rating of totally enclosed fan cooled 3-phase cage indution motors.

Hockenheim, 28.11.02
Theo Halter GmbH, Elektromotoren

T. Noor-Herbert ppa. F. Heinemann

This certificate attests to the conformity with the named directives, however, it is not a guarantee of properties in the meaning of product liability.