NOTES:

1. OBTAIN SHROUD-WHEEL CLEARANCE BY SELECTING APPROPRIATE SHIM IF NECESSARY GRIND MAXIMUM ON NON-STEP SIDE ONLY. SHIM SURFACES ARE TO BE PARALLEL WITHIN 0.0002.
2. ADJUST ROTOR ASSEMBLY CLEARANCES MAINTAINING APPROXIMATE WHEEL AND DIFFUSER PLANES IN LINE AND ADD OR REMOVE SHIMS OF ITEM #024 & #025 AS NEEDED FOR GIVEN WHEEL-SHROUD CLEARANCE AND THRUST BEARING CLEARANCE.
3. APPLY SILICONE GREASE GENEROUSLY TO SEAL RING SPLITLINE, SEAL LIP (INCLUDING SPRING CAVITY) AND O.D. THE SHAFT IN THE SEAL ZONE SHOULD ALSO BE GENEROUSLY COATED BEFORE ASSEMBLY.
4. DELETED.
5. APPLY PERMATEX SCS-090-01 TO MATING PARTS AS INDICATED.
6. RTD LEADS AND CONNECTORS TO BE LOCATED AND CLAMPED AWAY FROM MOVING GEARS, ETC. CONNECTORS MAY HANG IN OIL RETURNS, PROVIDED ENOUGH SLACK IS LEFT FOR BEARING DISASSEMBLY.
   - IF RTD'S ARE NOT USED, PLUG HIGH SPEED BEARING RTD SLOTS WITH O-RINGS PER BEARING DRAWING. REF. COREOPTION BOM.
7. REFER TO ATLAS COPCO STANDARD W1-0247 FOR FASTENER TIGHTENING TORQUES.
8. SEE ASSEMBLY PROCEDURE #1320707978.
9. CENTER THE DIFFUSER IN THE COMPRESSOR HOUSING USING TEMPORARY SHIM STRIPS. THEN TRANSFER THE HOLE LOCATION FROM THE DIFFUSER VANE TO THE COMPRESSOR HOUSING. REMOVE THE DIFFUSER AND DRILL Ø0.1920/0.187 HOLE OR DOWEL PIN SIZE FROM STAINLESS DIFFUSER OPTION TO DEPTH SHOWN.
10. CEMENT ENDS OF O-RING WITH LOCTITE #414. LUBRICATE WITH SILICONE GREASE FOR ASSEMBLY.
11. RUN 1/4" TUBE (ITEM# 092) FROM ITEM #136 TO PUMP MOUNTING BRACKET.

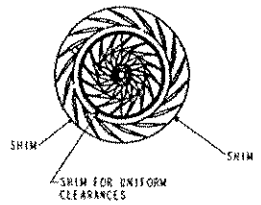

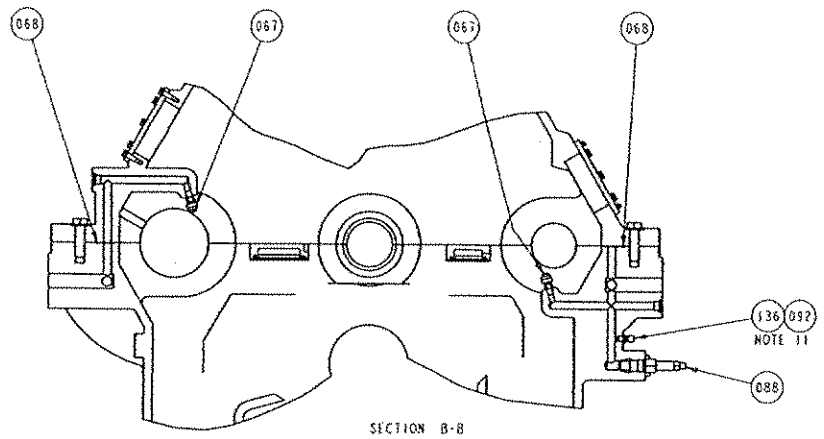

SECTION B-B

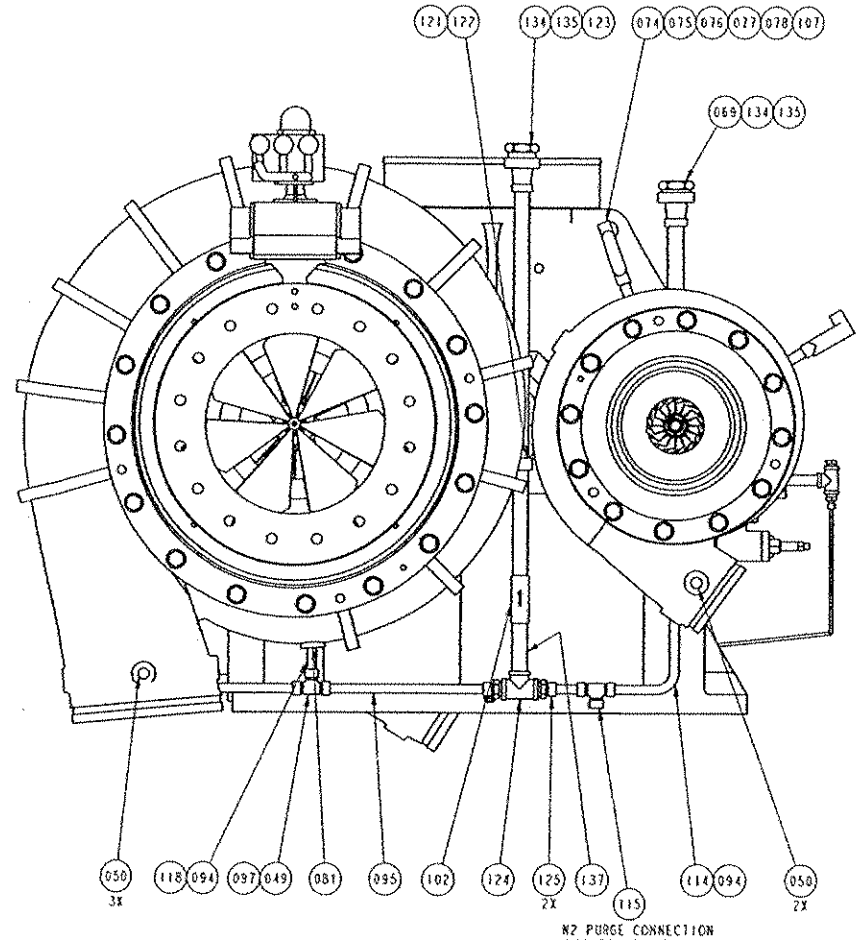

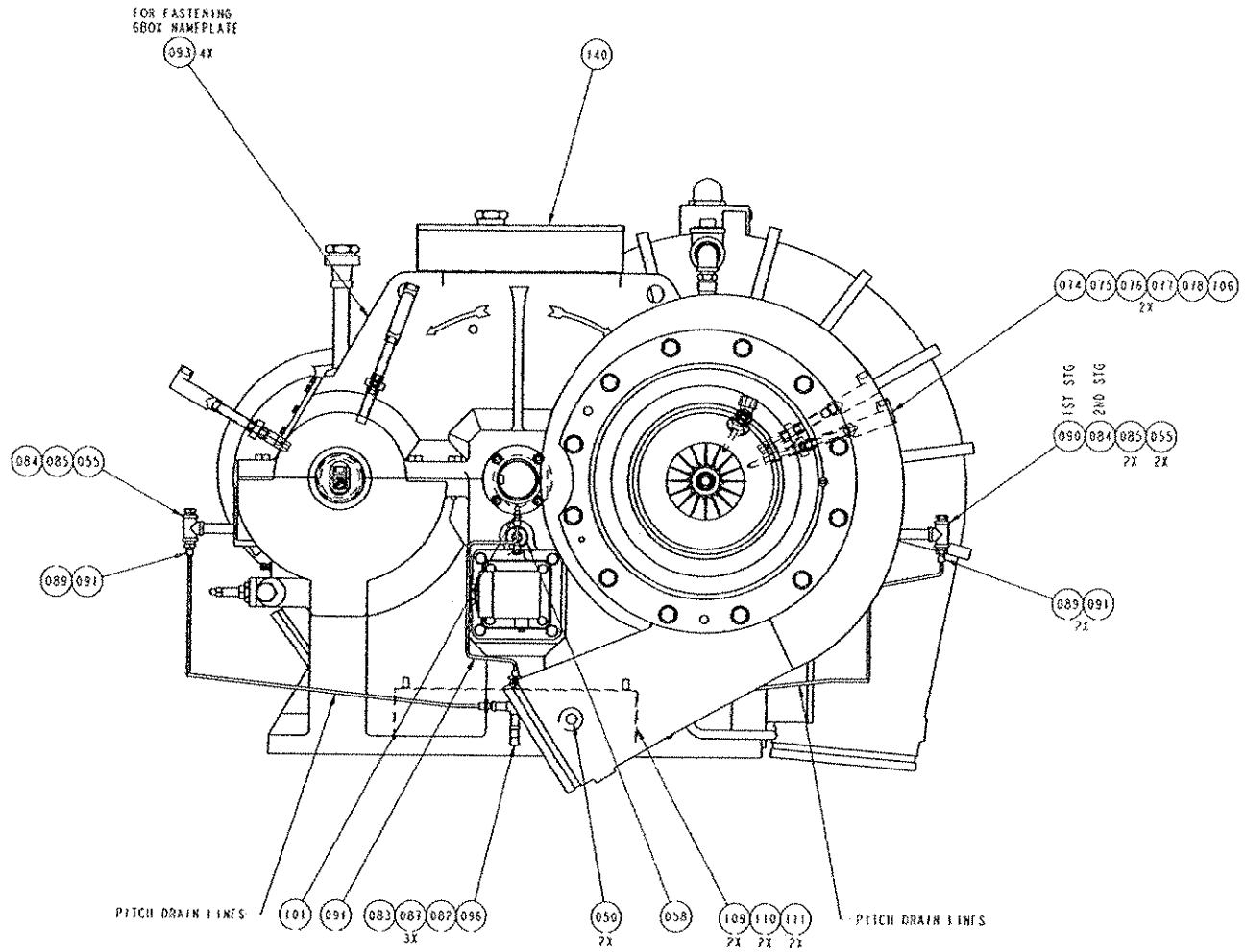

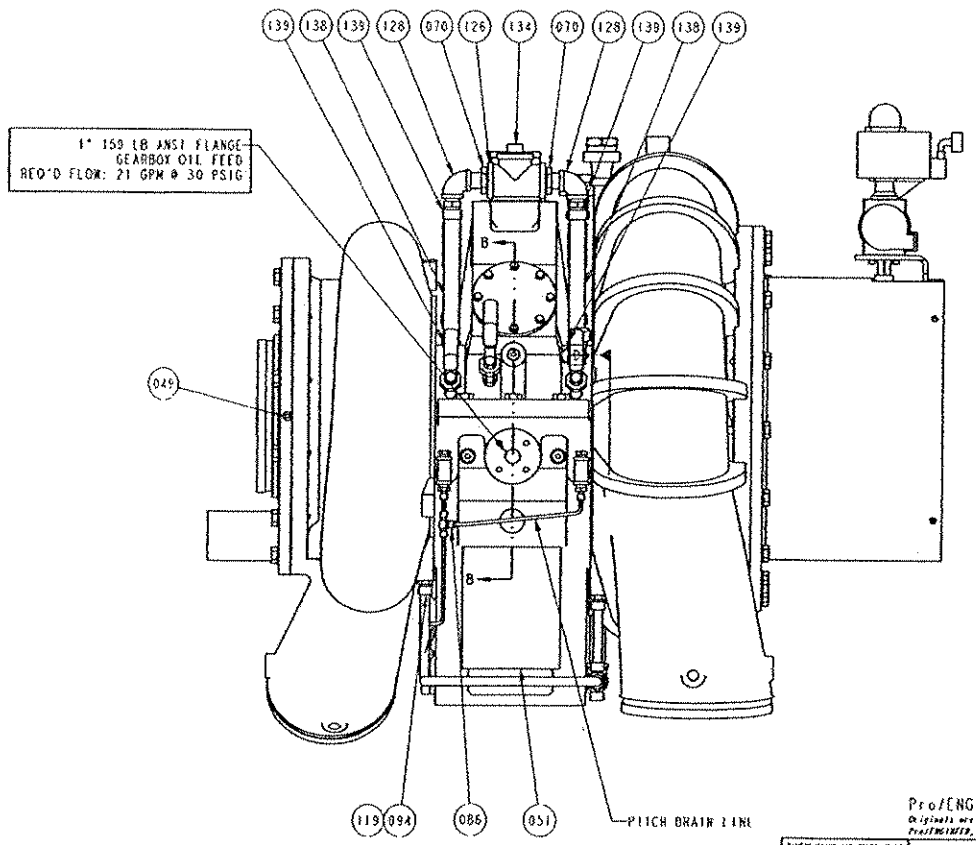

Rev.	Zone	Revision Description	Made	Appd	Processed
					0

THIS DRAWING IS A PROPRIETARY DOCUMENT OF ATLAS COPCO COMPRESSORS INC. THE INFORMATION CONTAINED HEREIN IS TO BE KEPT CONFIDENTIAL AND NOT DISCLOSED TO ANY OTHER PARTY WITHOUT THE WRITTEN CONSENT OF ATLAS COPCO COMPRESSORS INC.

ProEENGINEER produced drawing.
Originals are stored electronically. All modifications to this drawing must be done using ProEENGINEER, in order to maintain full associativity. No manual changes allowed.

DIMENSIONING AND TOLERANCING AS ACCORDANCE WITH ASME Y14.5M-1994

UNTOLERANCED DIMENSIONS ARE BASIC

ATLAS COPCO STANDARDS/Class: 43000

CORE UNIT ASSY, HL8 4 75 50 HZ W IGV N2 SEPARATE BM ISSUED

Scale: 1:16 | DRW | 1320102811 | E

Drawn by: J. Skeely

JOB: HL8 41197/8

1320102811 2 of 2