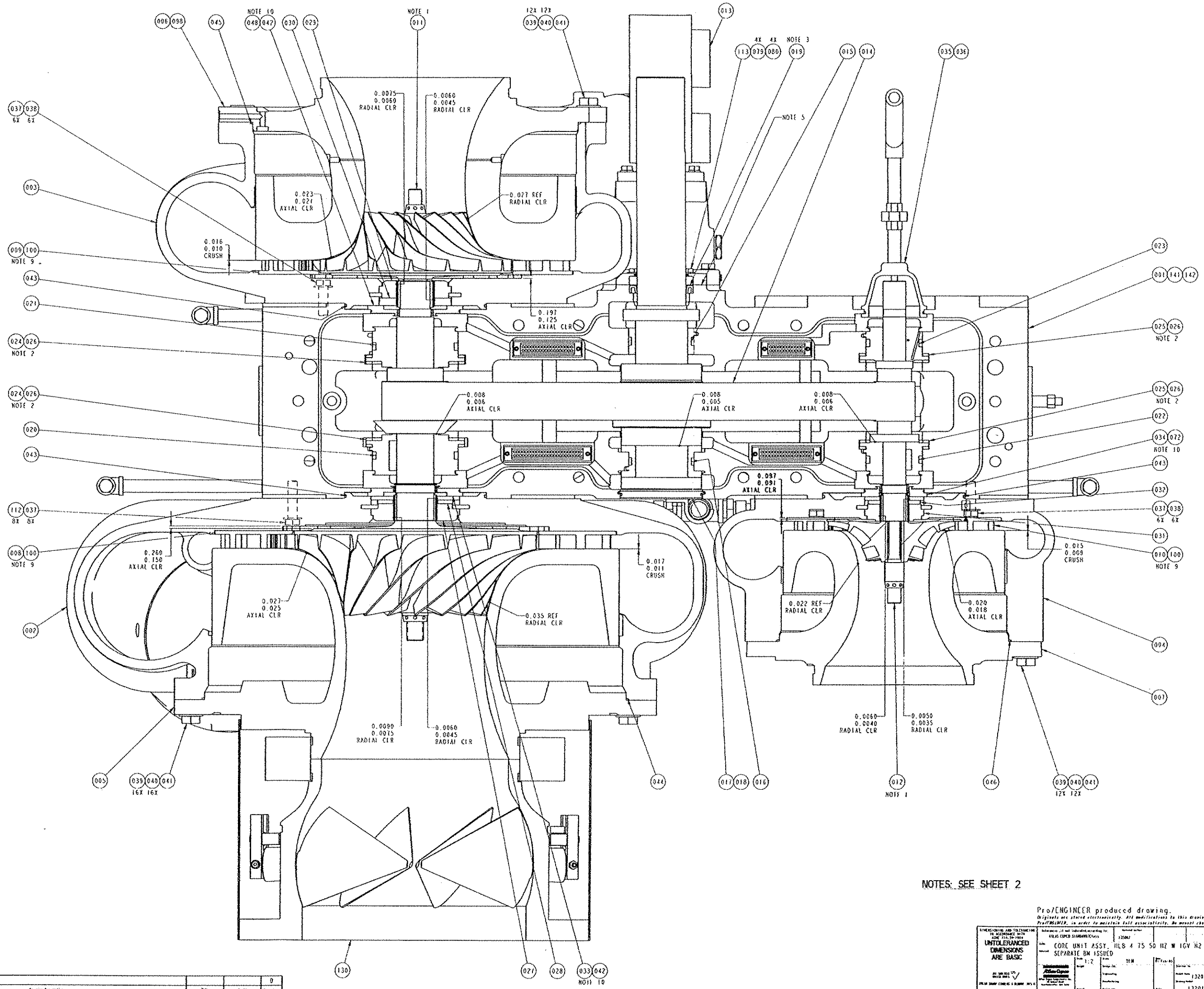

NOTES: SEE SHEET 2

Pro/ENGINEER produced drawing.
Originals are stored electronically. All modifications to this drawing must be done using Pro/ENGINEER, in order to maintain full associativity. No manual changes allowed.

DIMENSIONING AND TOLERANCING IN ACCORDANCE WITH ASME Y14.5M-1994 UNTOLERANCED DIMENSIONS ARE BASIC	REFERENCE (if not indicated) according to: ASME/ANSI STANDARD/Class	Material number 135062		Drawing Size 11X17 M
	Title: CORE UNIT ASSY. HL8 4 T5 50 H2 W IGV N2 SEPARATE BM ISSUED			
	Allison Engine Company	Scale 1:2	Date 99 M	Drawing No. 13201028 11
		Weight	Design No.	Model Name 13201028 11
		Approved	Engineering	Drawing Number 13201028 11
		Drawn J. Sheely	Manufacturing	Date 27-Feb-99
JOB #L8 47197/8				Sheet 1 of 2

Rev.	Zone	Revision Description	Date	Approved	Revision
					0