KOSAIR 2004

CONFIGURATION IBIS R+

IBIS-VERSION 3.65

THIS DOCUMENTATION CONTAINS THE CONFIGURATION OF PROTRONIC 550 CONTROLLER:

FIC 11077 (ANTISURGE CONTROL KOSAIR)

CONTROLLER VERSION 1.206 M
LIBRARY 3.3.6

AIR LIQUIDE™

N° D'AFFAIRE *JOB NUMBER*	FMT *FMT*	GROUPE *GROUP*	N° *NBR*	Rev *Rev*
KOSICE 50-3023-01	A4	611		

freigegeben

Rev.	Changed	Date	Checked	Date	Change no.	Change description
Rindlisbacher H		14.07.2005				
Issued		Date	Checked	Date	Released	Date
Type/Size: RIK 80					Project no.: N.7100175	
Description: CONFIGURATION IBIS R+					Project: KOSAIR 2004	
Document: 837019325		Type: SPE		Part: 000	Rev.:	Lang.: EN / Page 0 of 27

The reproduction, distribution and utilisation of this document as well as the communication of its contents to other without explicid authorization is prohibited. Offenders will be held liable for the payment of damages. All rights reserved in the event of the grand of a patent, utility model or design.

Claudia Patruno RRM4 SPE 837019325 000 00 18.07.2005

(c) MAN TURBO AG

- 01 fic11077
  - 01 FIC (P500/550)
    - 01 IN_ANALOG (PL)
      - 01 DP_IN (FBD)
      - 02 P2_IN (FBD)
      - 03 Y_EXT_IN (FBD)
    - 02 IN_DIGITAL (PL)
      - 01 IN_DIGITAL (FBD)
    - 03 REG_PARAM (PL)
      - 01 TABLE (FBD)
      - 02 PARAMETER_1 (FBD)
    - 04 LOOP1 (PL)
      - 01 L1_XW (FBD)
      - 02 L1_GW (FBD)
      - 03 L1_ALV (FBD)
      - 04 L1_DI_GS (FBD)
      - 05 L1_SKALA (FBD)
      - 06 L1_RAMPE (FBD)
      - 07 L1_HIC_1 (FBD)
      - 08 L1_HIC_2 (FBD)
      - 09 L1_PI_PARA (FBD)
      - 10 L1_PID_PRG (FBD)
      - 11 L1_STDBA (FBD)
      - 12 L1_ANZSL (FBD)
      - 13 L1_SORTIE (FBD)
    - 05 OUT_ANALOG (PL)
      - 01 PID_OUT (FBD)
    - 06 OUT_DIGITAL (PL)
      - 01 OUT_DIGIT (FBD)
    - 07 MESSAGES (PL)
      - 01 MESSAGES (FBD)
- 02 Pool

Claudia Patruno RRM4 SPE 837019325 000 00 18.07.2005

AN TURBO AG

		Date		N.7100175 KOSAIR 2005		Basic Program		Customer	-
		Proces				U:/Protronic/Programs/Kosair		Z. No.	+
		Checke						ABB No.	ABB
Date	Name	Norm		Orig. 29.04.2005	Rep.f.	Rep.by		Item	Z. No.	P. 1

List of programms documented below :

Design number	Typ	Designation
- .fic11077/X01/P01/B01-F	FBD	Read differential pressure tra
- .fic11077/X01/P01/B02-F	FBD	Read pressure transmitter
- .fic11077/X01/P01/B03-F	FBD	Input external manual loading
- .fic11077/X01/P02/B01-F	FBD	Read digital inputs
- .fic11077/X01/P03/B01-F	FBD	Table with line of interventio
- .fic11077/X01/P03/B02-F	FBD	Read parameters of regulation
- .fic11077/X01/P04/B01-F	FBD	Calculation of deviation from
- .fic11077/X01/P04/B02-F	FBD	Limits for intervention line s
- .fic11077/X01/P04/B03-F	FBD	Response line shift
- .fic11077/X01/P04/B04-F	FBD	Dynamic Intervention with sel
- .fic11077/X01/P04/B05-F	FBD	Scaling for analogue display
- .fic11077/X01/P04/B06-F	FBD	Ramp for automatic charge/disc
- .fic11077/X01/P04/B07-F	FBD	manual control
- .fic11077/X01/P04/B08-F	FBD	Limitation of manual control a
- .fic11077/X01/P04/B09-F	FBD	Size of parameters Kp, Tn, Tv
- .fic11077/X01/P04/B10-F	FBD	Module PID controller
- .fic11077/X01/P04/B11-F	FBD	Switch mode of operation
- .fic11077/X01/P04/B12-F	FBD	Indication loops
- .fic11077/X01/P04/B13-F	FBD	Minimum selection of the contr
- .fic11077/X01/P05/B01-F	FBD	Controller analogue output
- .fic11077/X01/P06/B01-F	FBD	Out digital
- .fic11077/X01/P07/B01-F	FBD	Alarm text on controller displ

Claudia Patruno RRM4 SPE 837019325 000 00 18.07.2005

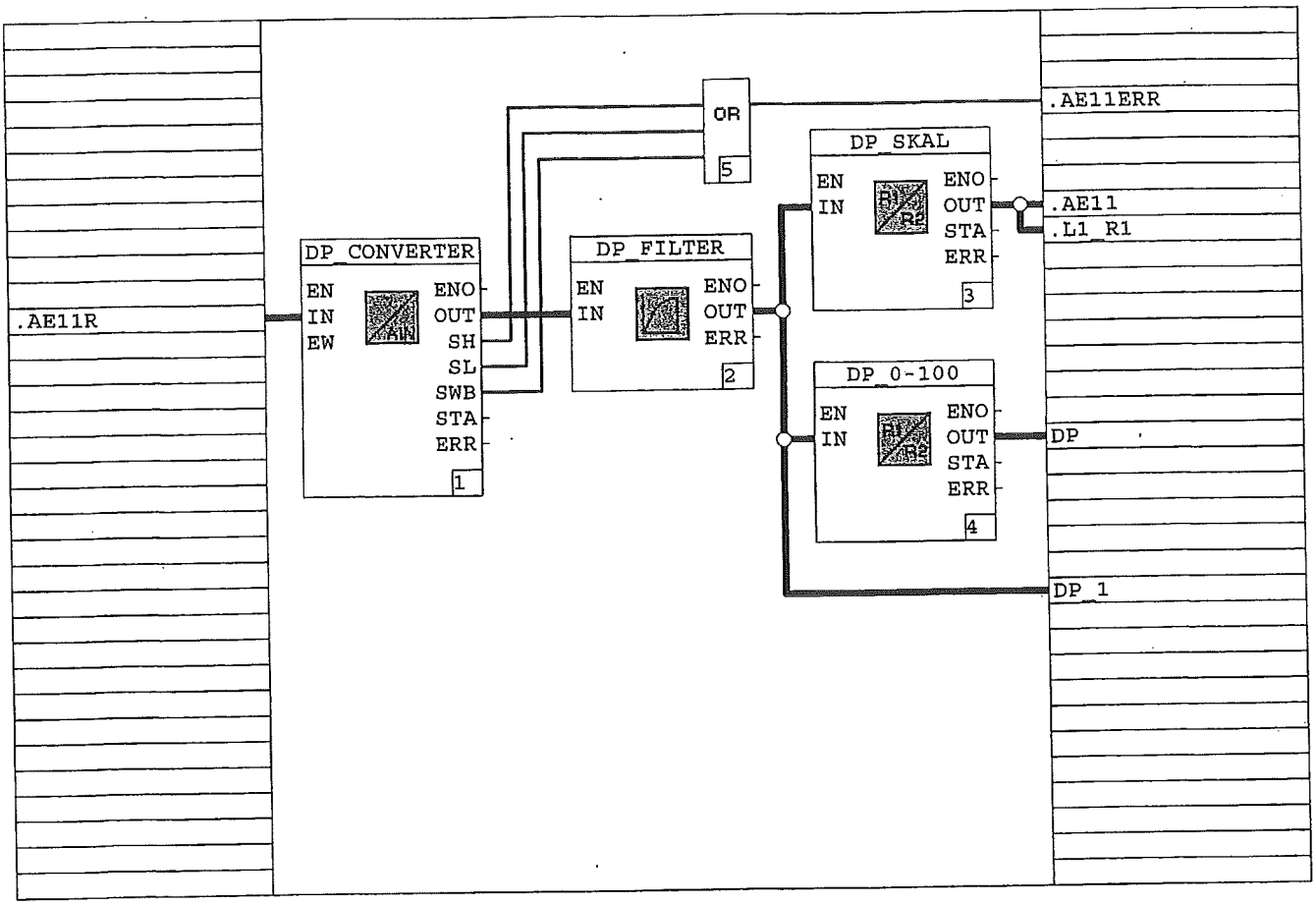

Claudia Patruno RRM4 SPE 837019325 000 00 18.07.2005

			Date	29.04.2005	H.7100175 KOSAIR 2005	Basic Program	DP_IN	Customer		
			Proces	Rindlisbacher				Z. No.		
			Checke			U:/Protronic/Programm/Kosair		ABB No.	ABB - .fic11077/X01/P01/P01-F	
								Item	Z. No.	F. 3
Date	Name	Norm			Orig. 29.04.2005	Rep.f.	Rep.by			

AN TURBO AG

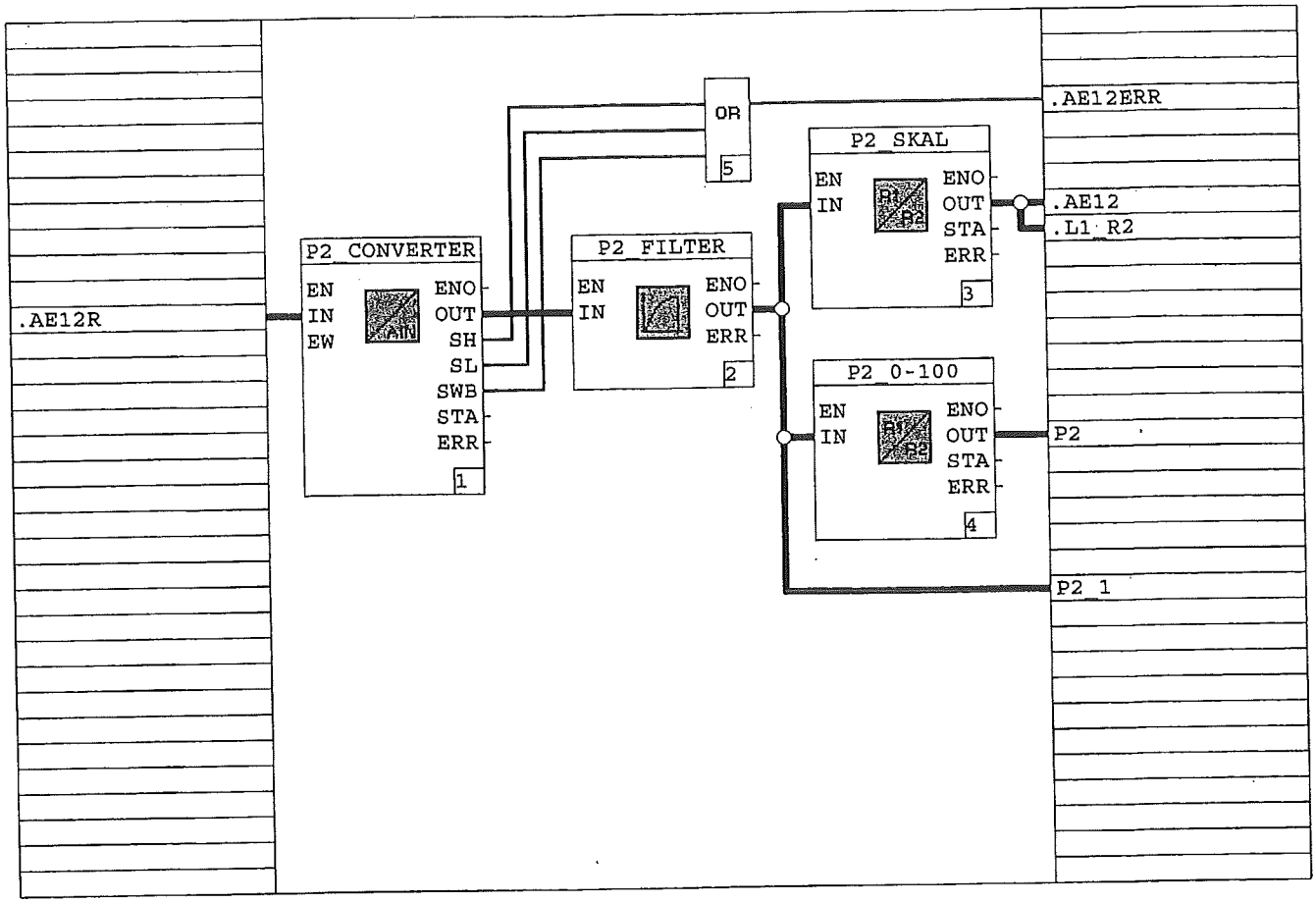

Claudia Patruno RRM4 SPE 837019325 000 00 18.07.2005

				Date	29.04.2005	N.7100175 KOSAIR 2005		Basic Program U:/Protronic/Programs/Kosair	P2_IN	Customer	
				Proces	Rindlisbacher					Z. No.	
				Checke						ABB No.	ABB - .fic11077/X01/P01/R02-F
	Date	Name		Norm		Orig. 29.04.2005	Rep.f.	Rep.by		Item	Z. No.

AN TURBO AG

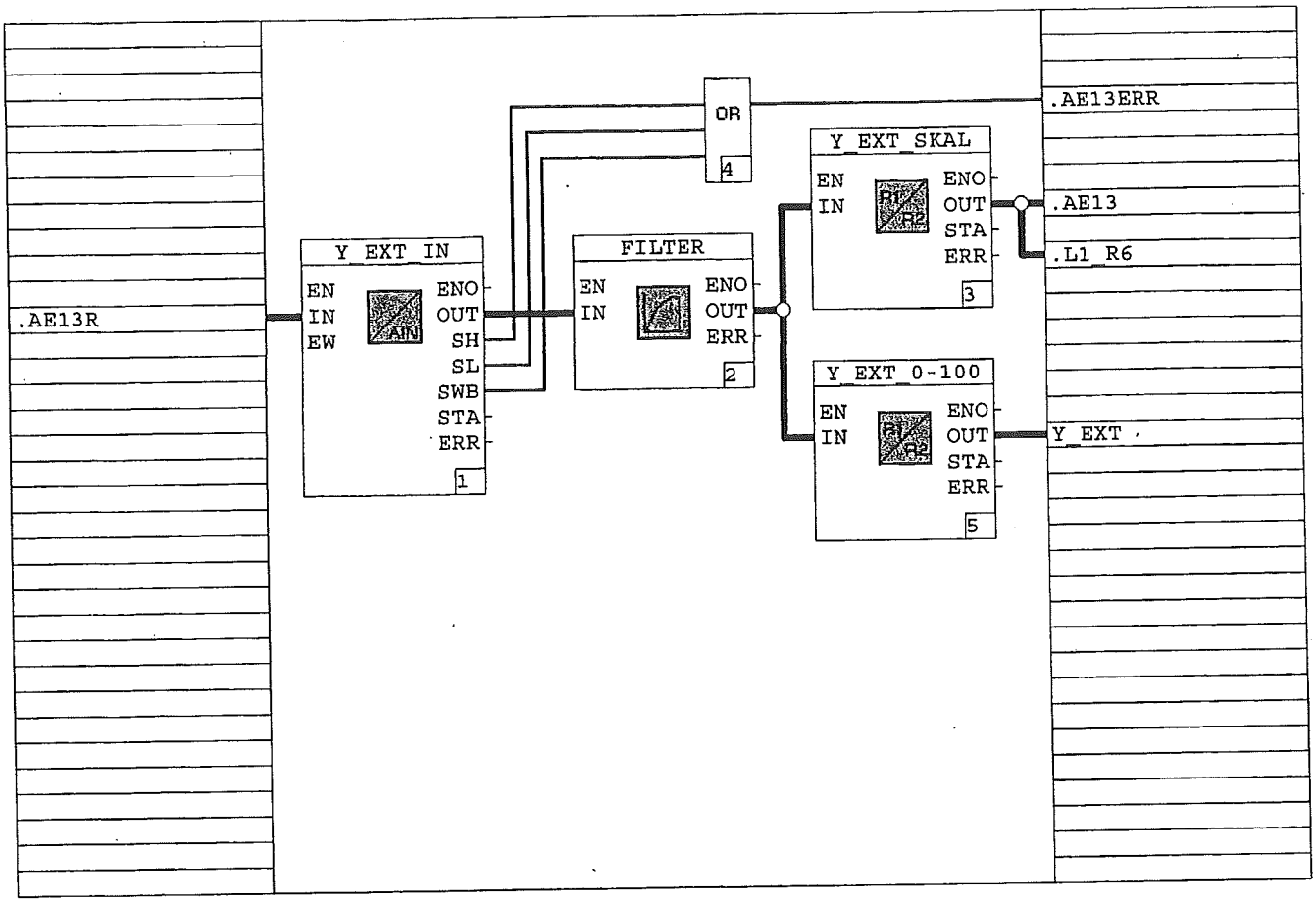

				Date	29.04.2005	N.7100175 KOSAIR 2005		Basic Program	Y_EXT_IN	Customer	
				Proced.	Rindlisbacher			U:/Protronic/Programa/Ko sair		Z. No.	
				Checke						ABB No.	ABB - .fic11077/X01/P01/B01-P
AN TURBO AG	Date	Name	Norm			Orig. 29.04.2005	Rep.f.	Rep.by		Item	Z. No. P.

Claudia Patruno RRM4 SPE 837019325 000 00 18.07.2005

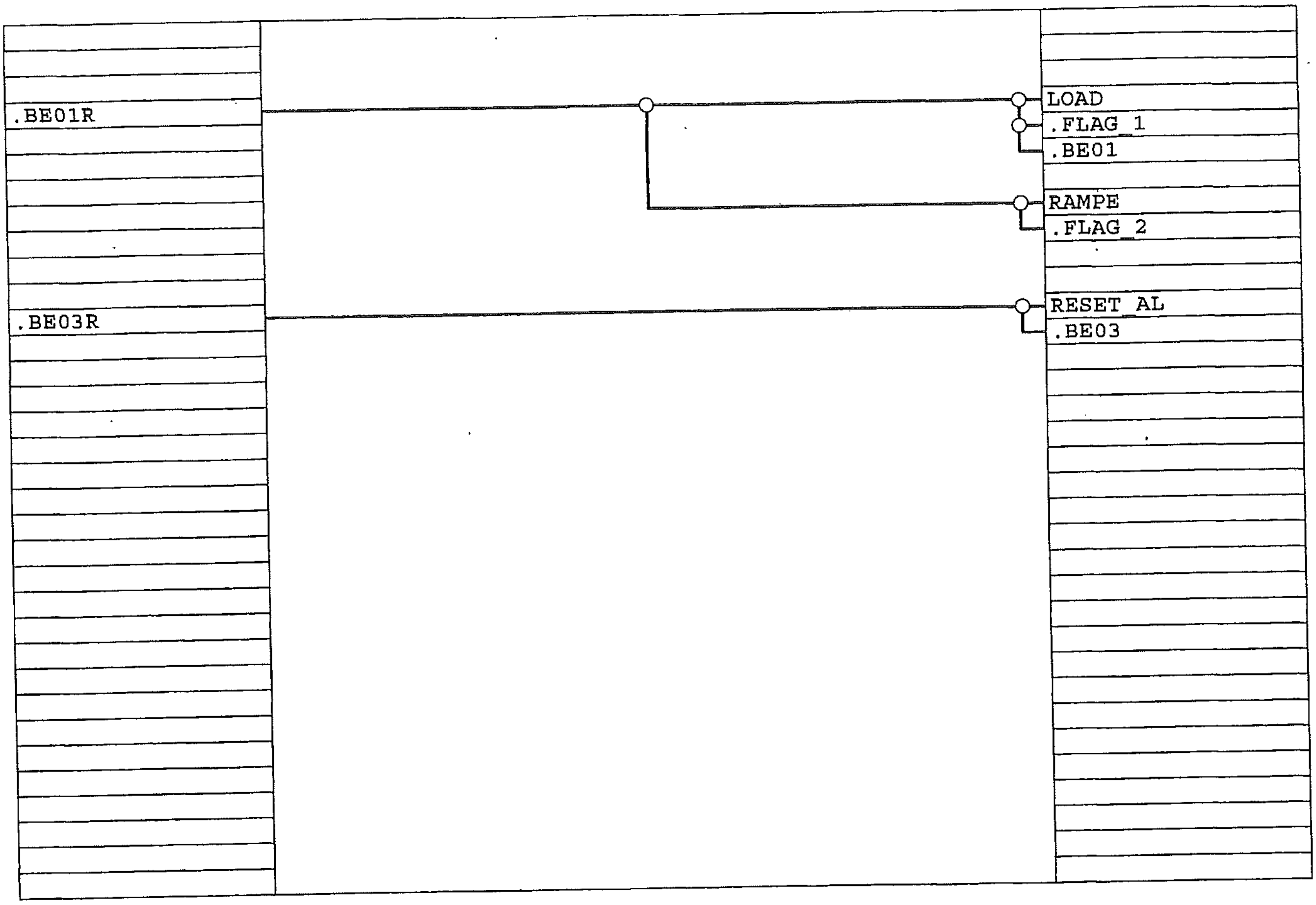

		Date	29.04.2005	N.7100175 KOSAIR 2005	Basic Program	DI_ENT	Customer		
		Proces	Rindlisbacher		U:/Protronic/Programs/Kosair		Z. No.		
		Checke					ABB No.	ABB - .ficl1077/X01/P02/B01-F	
Date	Name	Norm		Orig. 29.04.2005	Rep.f.	Rep.by	Item	Z. No.	P. 6

AN TURBO AG

Claudia Patruno RRM4 SPE 837019325 000 00 18.07.2005

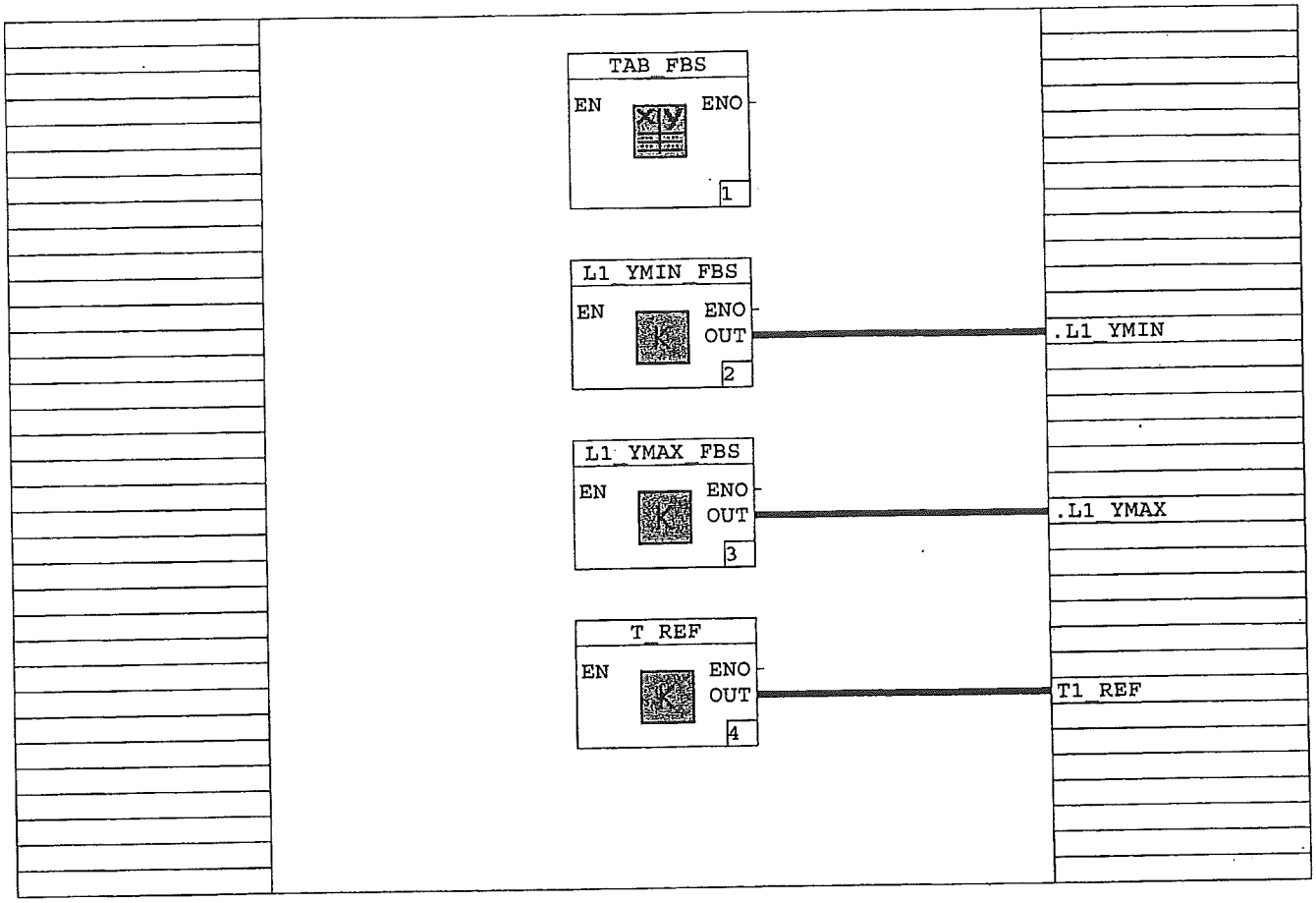

				Date	29.04.2005	N.7100175 KOSAIR 2005		Basic Program	TABLE	Customer	
				Proces	Rindlisbacher					Z. No.	
				Checke				U:/Protronic/Programs/Kosair		ABB No.	ABB - .fic11077/X01/P03/B01-P
		Date	Name	Norm		Orig. 29.04.2005	Rep.f.	Rep.by		Item	Z. No.

AN TURBO AG

Claudia Patruno RRM4 SPE 837019325 000 00 18.07.2005

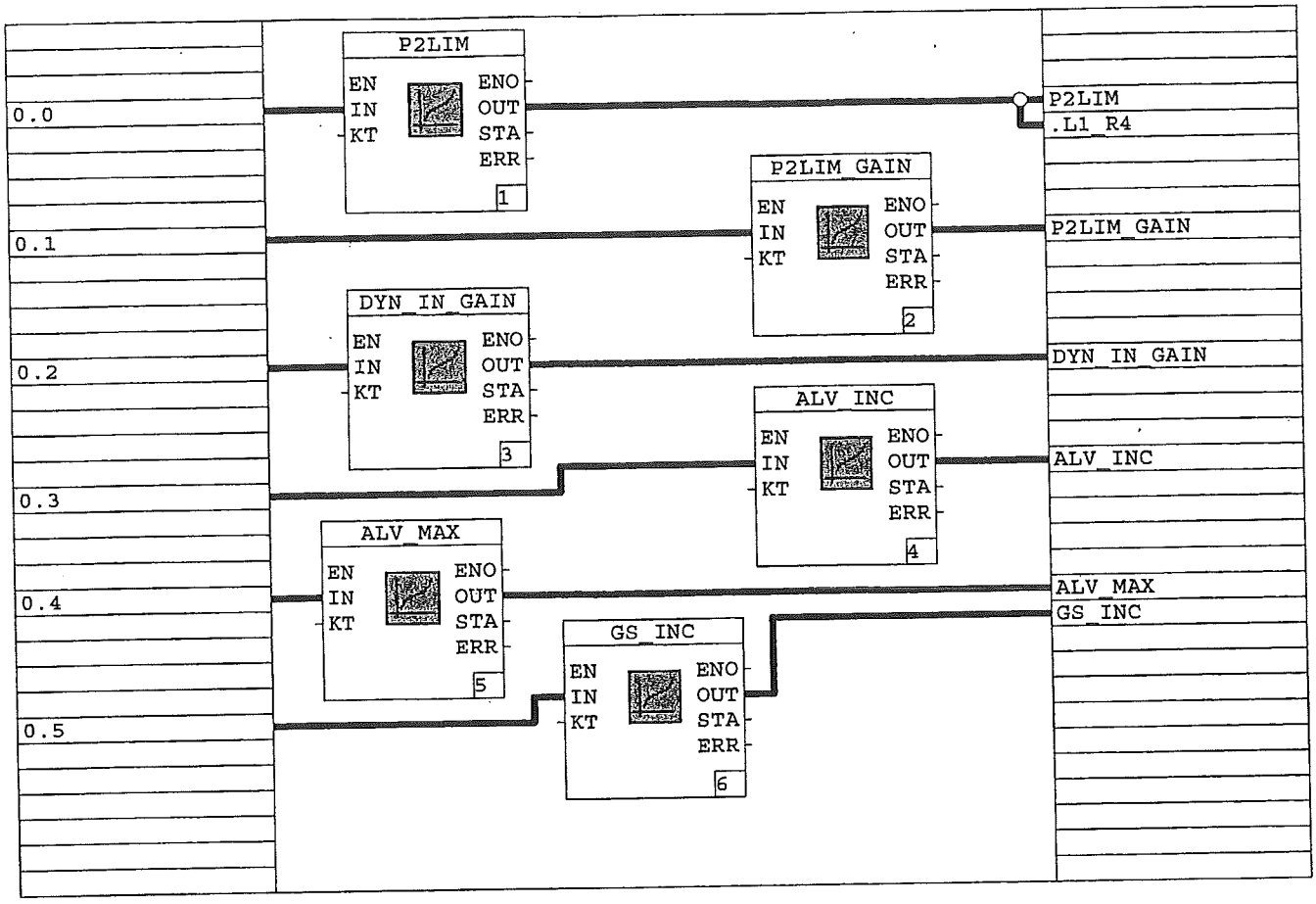

Claudia Patruno RRM4 SPE 837019325 000 00 18.07.2005

				Date	26.01.04	N.7100175 KOSAIR 2005		Basic Program	PARAMETER_1	Customer	
				Proced	J. Walas			U:/Protronic/Programs/Ko sair		Z. No.	
				Checke						ABB No.	ABB - .fic11077/X01/P03/B02-F
AN TURBO AG	Date	Name		Norm		Orig. 29.04.2005	Rep.f.	Rep.by		Item	Z. No. P.

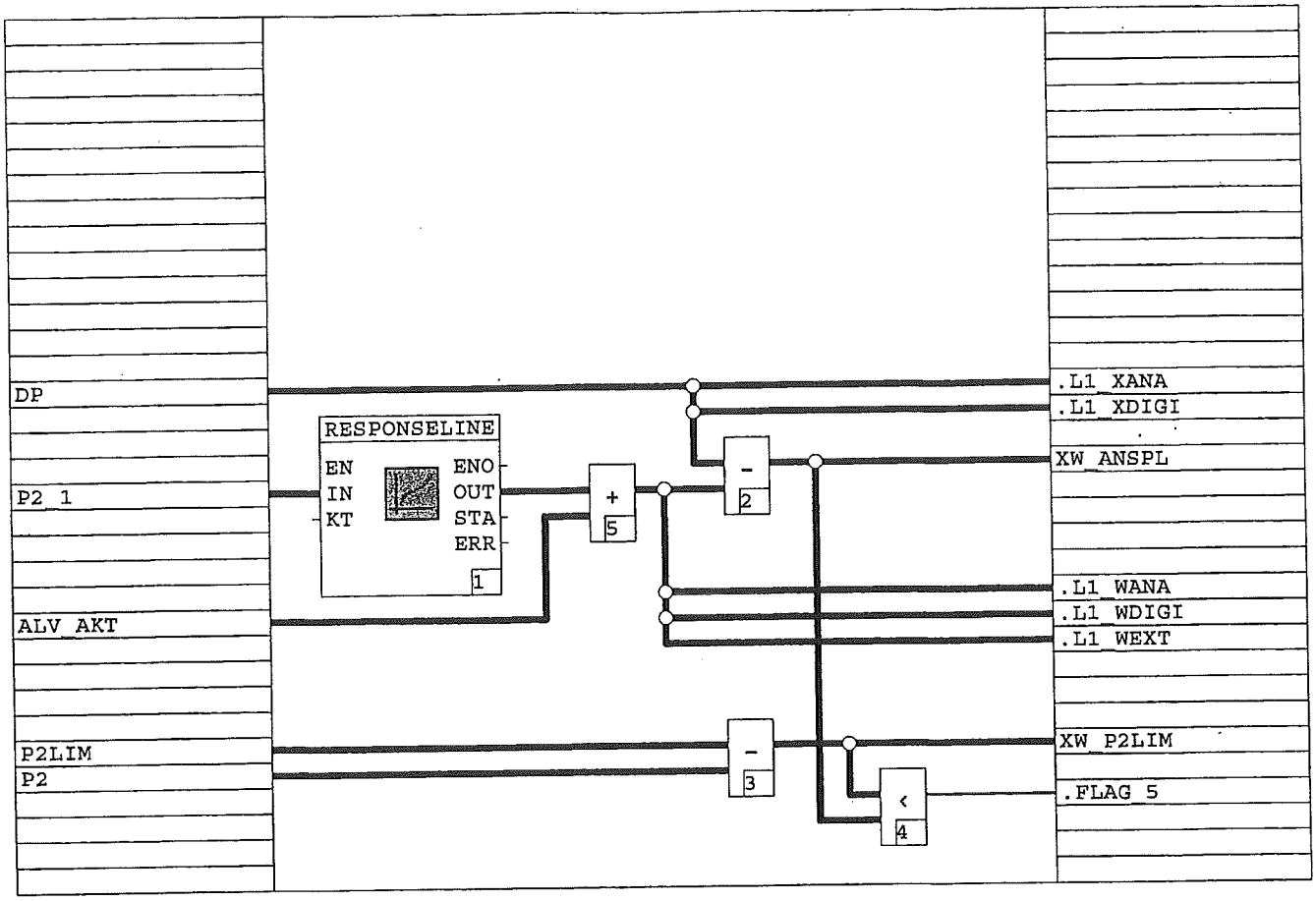

				Date	29.04.2005	N.7100175 KOSAIR 2005		Basic Program	L1_XH	Customer	
				Proceed	Rindlisbacher			U:/Protronic/Programs/Kosair		Z. No.	
				Checked						ABB No.	ABB - .fic11077/X01/P04/H01-F
				Norm		Orig. 29.04.2005	Rep.f.	Rep.by		Item	Z. No. F.

AN TURBO AG Date Name

Claudia Patruno RRM4 SPE 837019325 000 00 18.07.2005

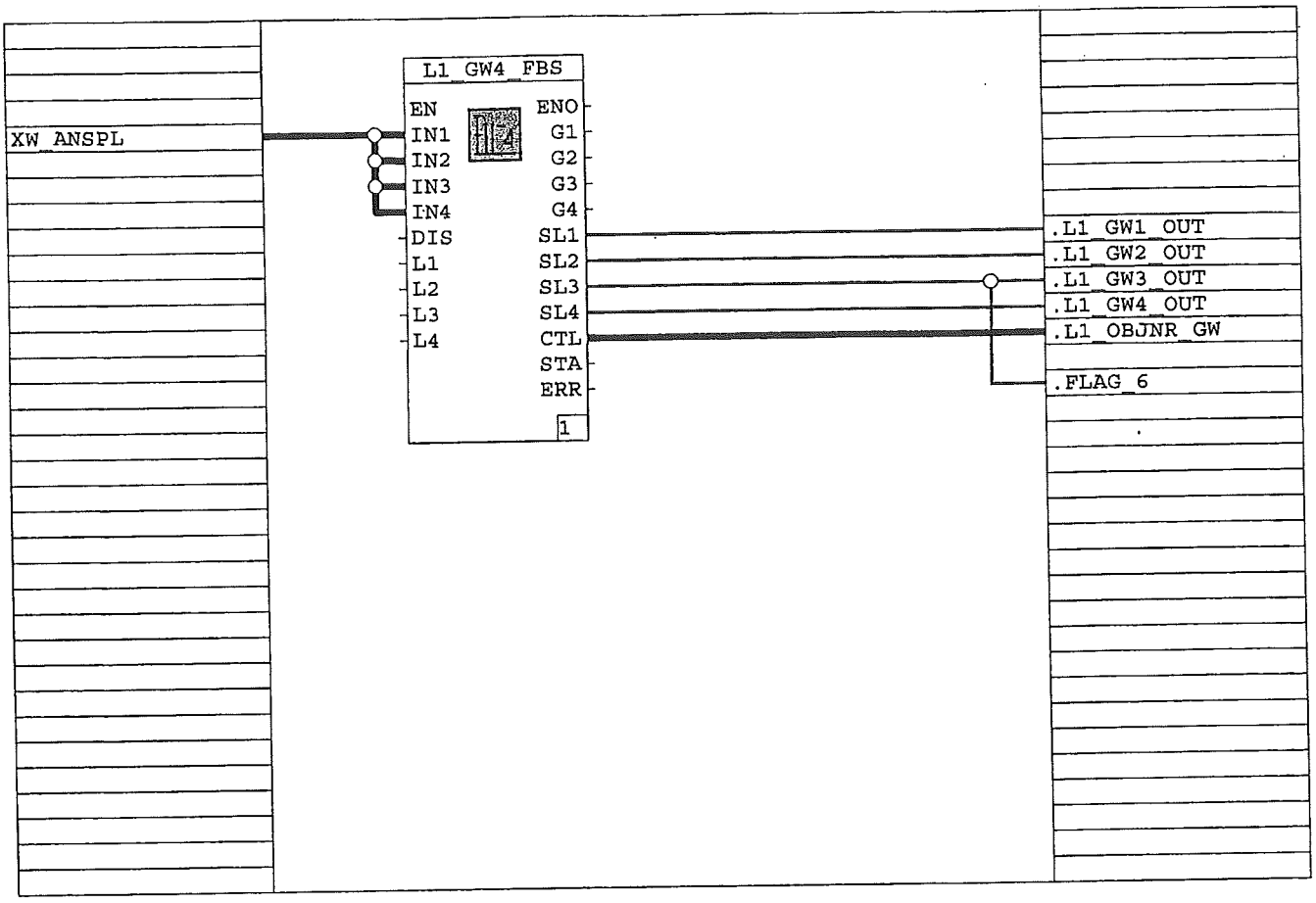

			Date	29.04.2005	N.7100175 KOSAIR 2005		Basic Program	L1_GW	Customer	
			Process	Rindlisbacher			U:/Protronic/Programs/Kosair		Z. No.	
			Checke						ABB No.	ABB - .fic11077/X01/B04/B02-F
AN TURBO AG	Date	Name	Norm		Orig. 29.04.2005	Rep.f.	Rep.by		Item	Z. No.

Claudia Patruno RRM4 SPE 837019325 000 00 18.07.2005

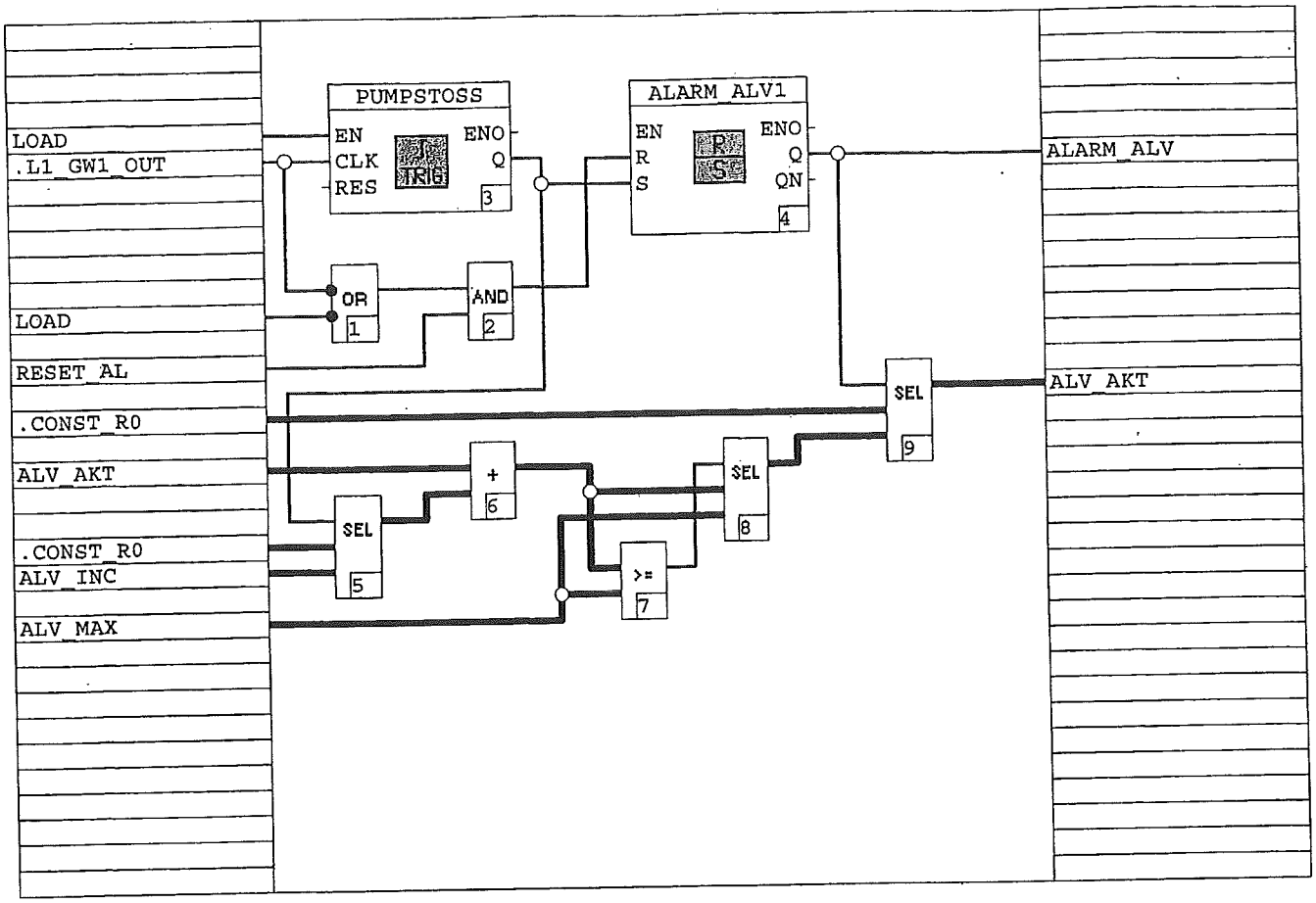

Claudia Patruno RRM4 SPE 837019325 000 00 18.07.2005

				Date	29.04.2005	N.7100175 KOSAIR 2005		Basic Program	L1_ALV	Customer	
				Proca	Kindlisbacher			U:/Protronic/Programs/Kosair		Z. No.	
				Checke						ABB No.	ABB - .fic11077/X01/P04/B03-P
AN TURBO AG	Date	Name	Norm			Orig. 29.04.2005	Rep.f.	Rep.by		Item	Z. No. P.

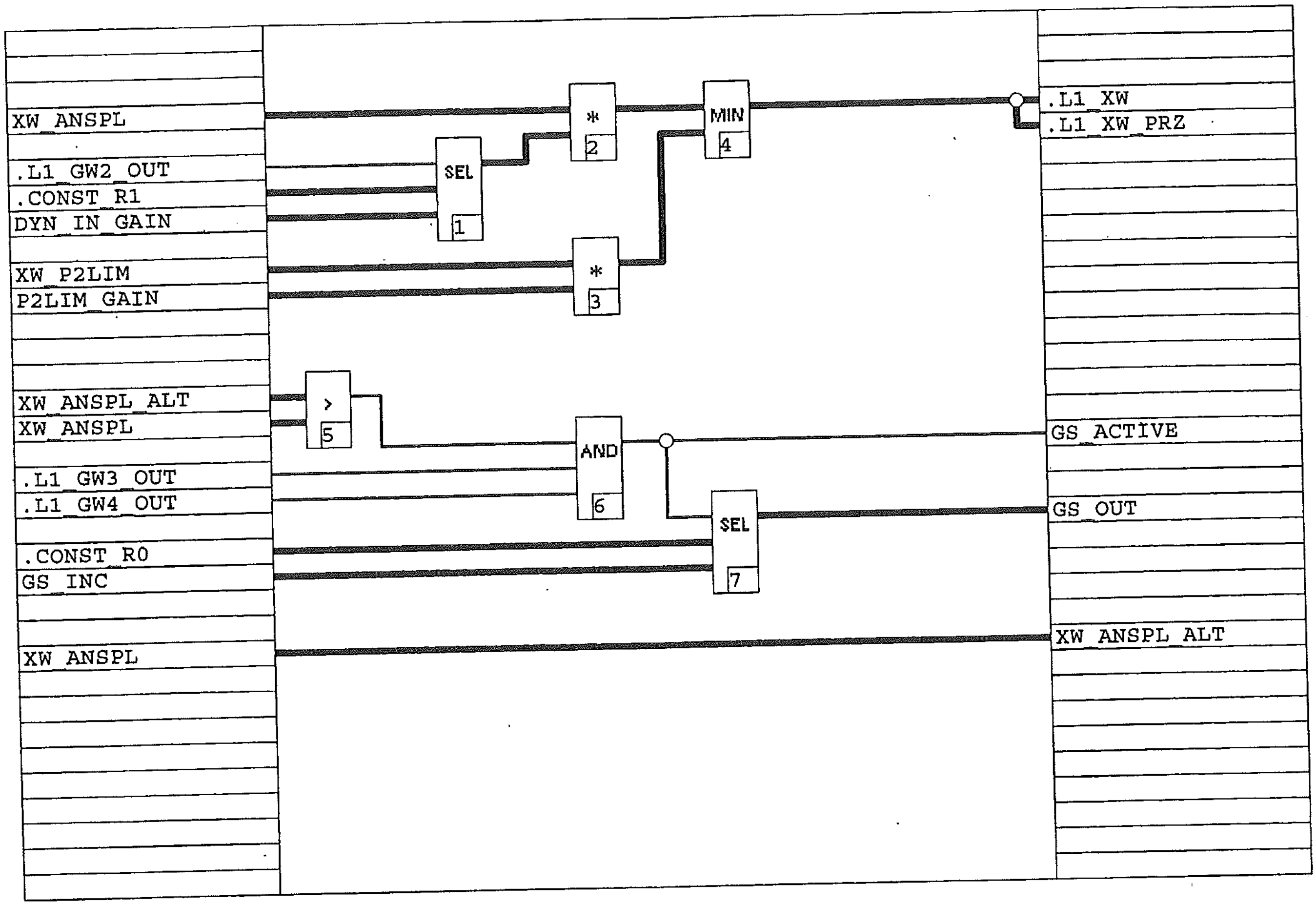

Date	29.04.2005	N.7100175 KOSAIR 2005	Basic Program U:/Protronic/Programs/Kosair	L1_DI_GS	Customer	-			
Proces	Rindlisbacher				Z. No.	+			
Checke					ABB No.	ABB	-	.fic11077/X01/P04/B04-F	
Date / Name / Norm		Orig. 29.04.2005	Rep.f.	Rep.by	Item	Z. No.			P. 12

AN TURBO AG

Claudia Patruno RRM4 SPE 837019325 000 00 18.07.2005

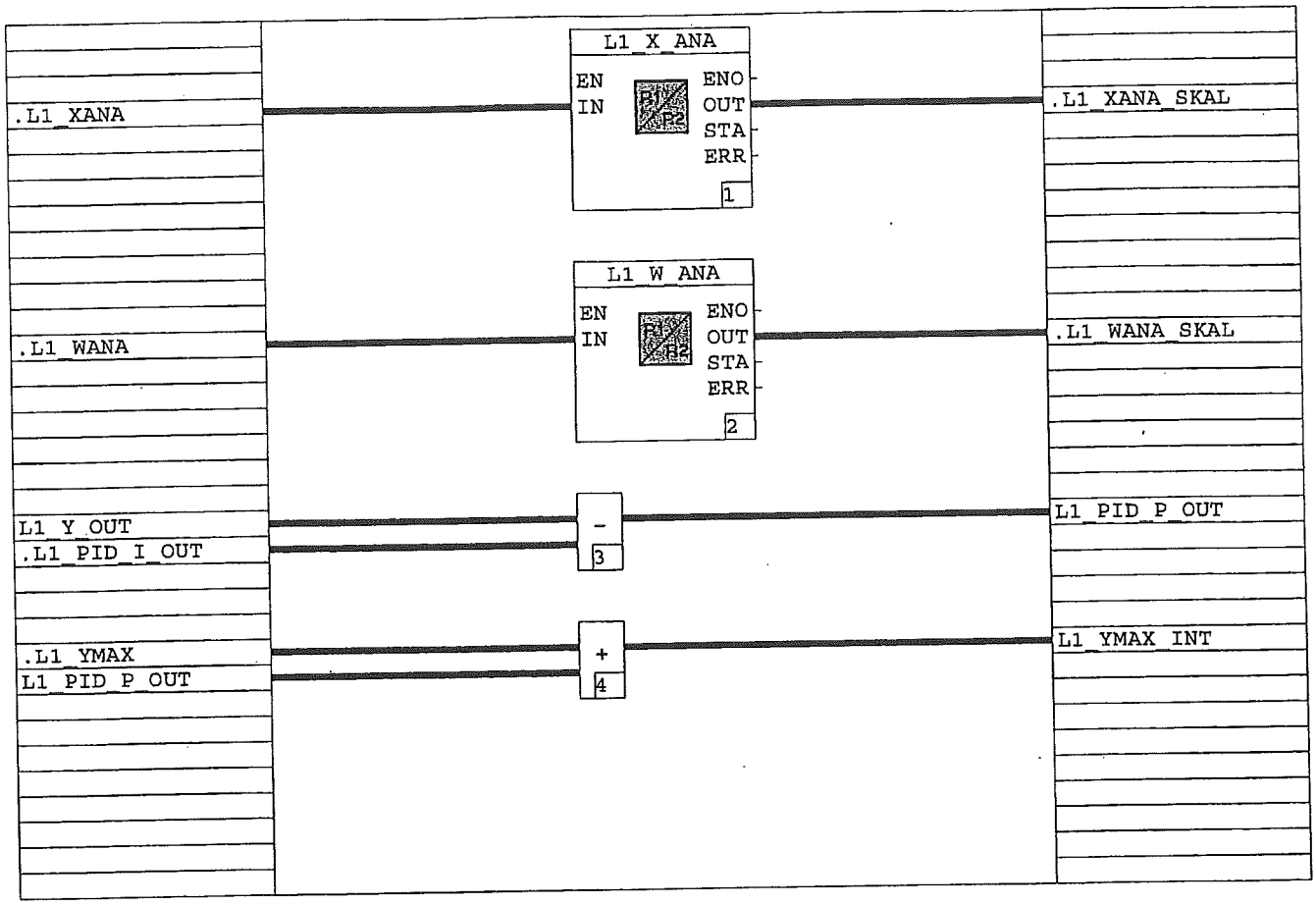

Claudia Patruno RRM4 SPE 837019325 000 00 18.07.2005

				Date	29.04.2005	N.7100175 KOSAIR 2005		Basic Program	L1_SKALA	Customer
				Proces	Rindlisbacher			U:/Protronic/Programs/Kosair		Z. No.
				Checke						ABB No.
AN TURBO AG	Date	Name	Norm			Orig. 29.04.2005	Rep.f.	Rep.by		Item

ABB - .fic11077/X01/P04/B05-P
Z. No.
P. 1.

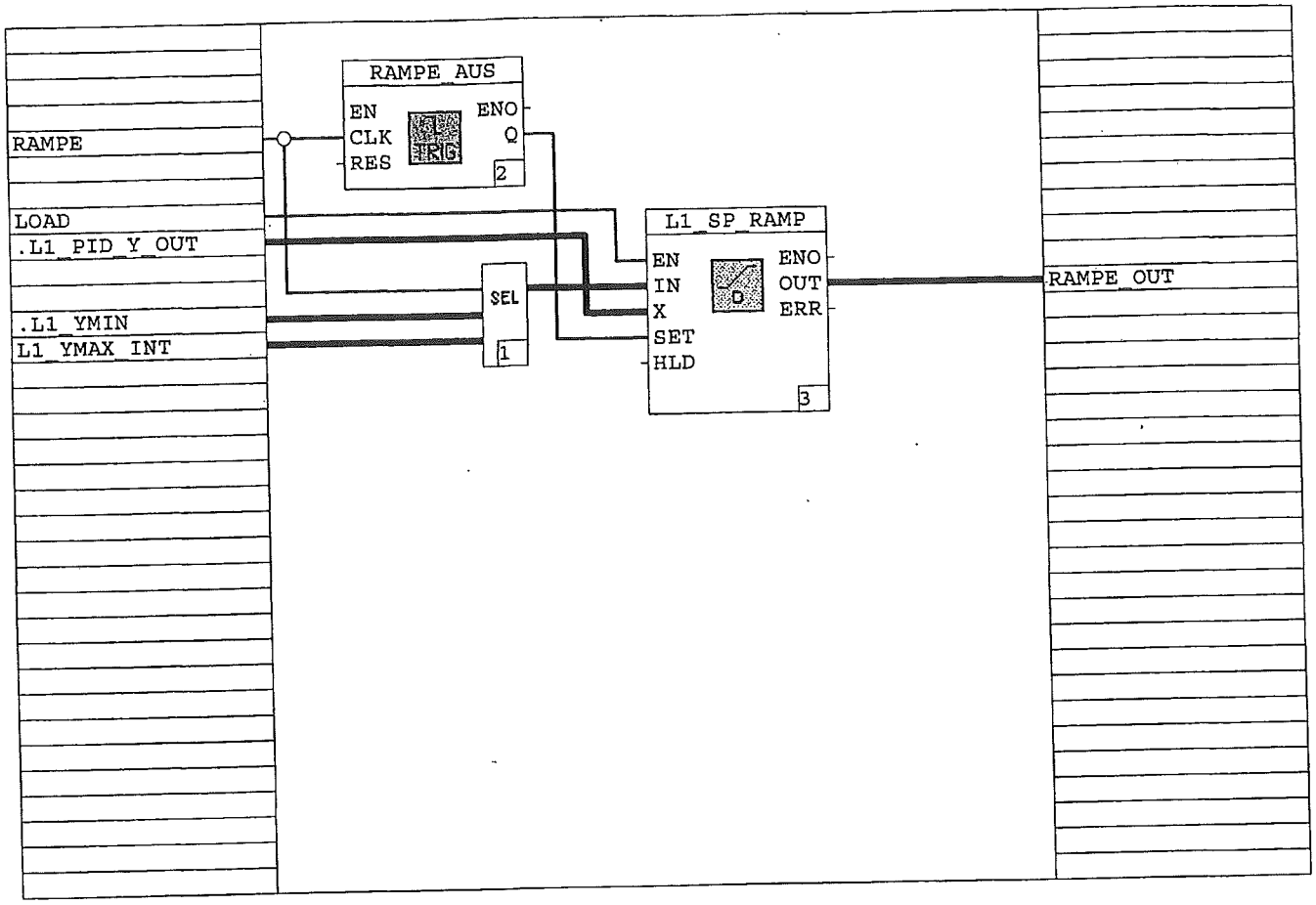

				Date	29.04.2005	N.7100175 KOSAIR 2005		Basic Program	L1_RAMPE	Customer	-
				Proces	Rindlisbacher			U:/Protronic/Programs/Kosair		Z. No.	+
				Checke						ABB No.	ABB - .fic11077/X01/P04/B06-P
AN TURBO AG	Date	Name		Norm		Orig. 29.04.2005	Rep.I.	Rep.by		Item	Z. No. P. 1.

Claudia Patruno RRM4 SPE 837019325 000 00 18.07.2005

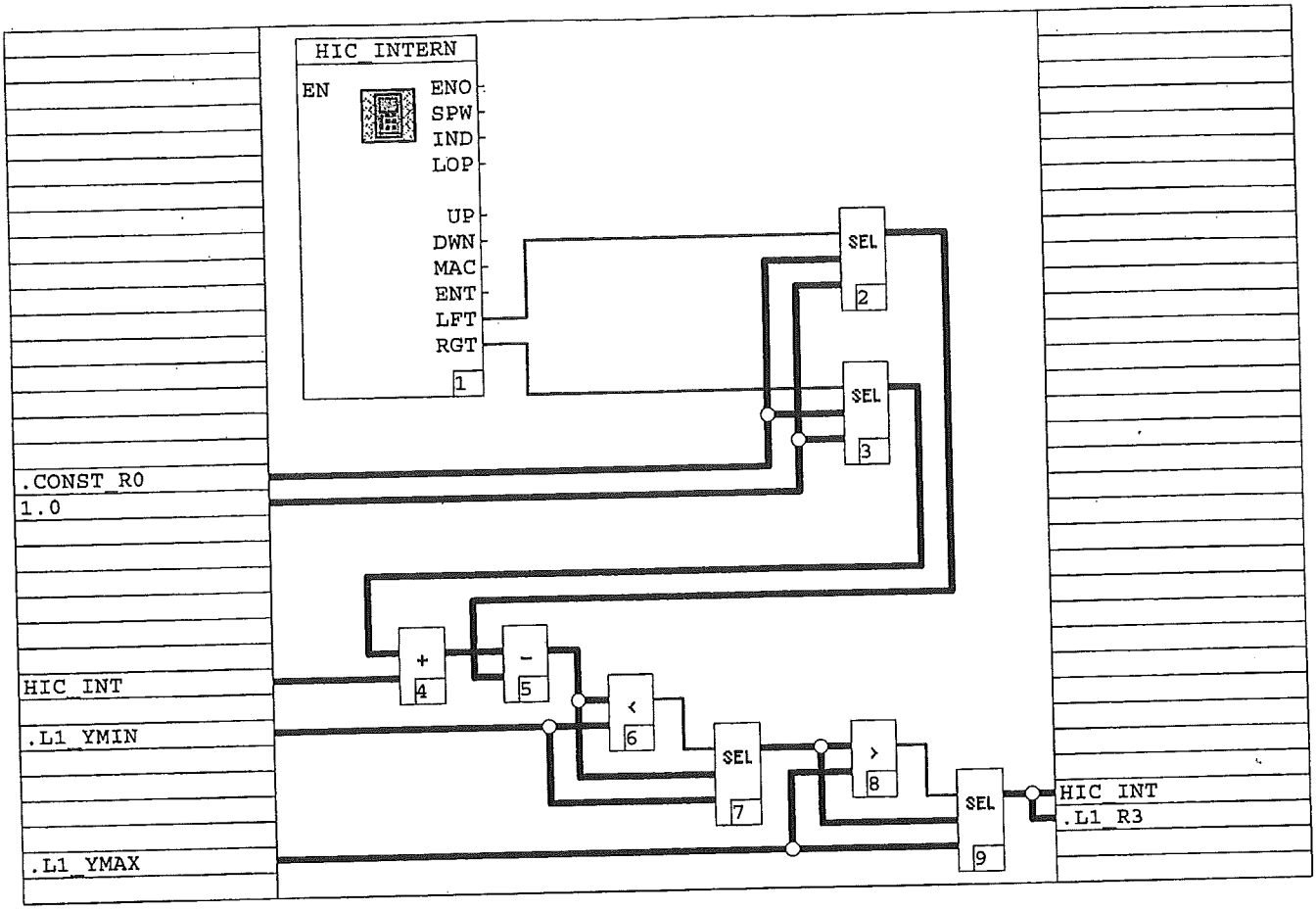

				Date	29.04.2005	N.7100175 KOSAIR 2005		Basic Program	L1_HIC_1	Customer	
				Proces	Rindlisbacher			U:/Protronic/Programs/Kosair		Z. No.	
				Checke						ABB No.	ABB - .fic11077/X01/P04/B07-F
AN TURBO AG	Date	Name		Norm		Orig. 29.04.2005	Rep.f.	Rep.by		Item	Z. No. P. 1.

Claudia Patruno RRM4 SPE 837019325 000 00 18.07.2005

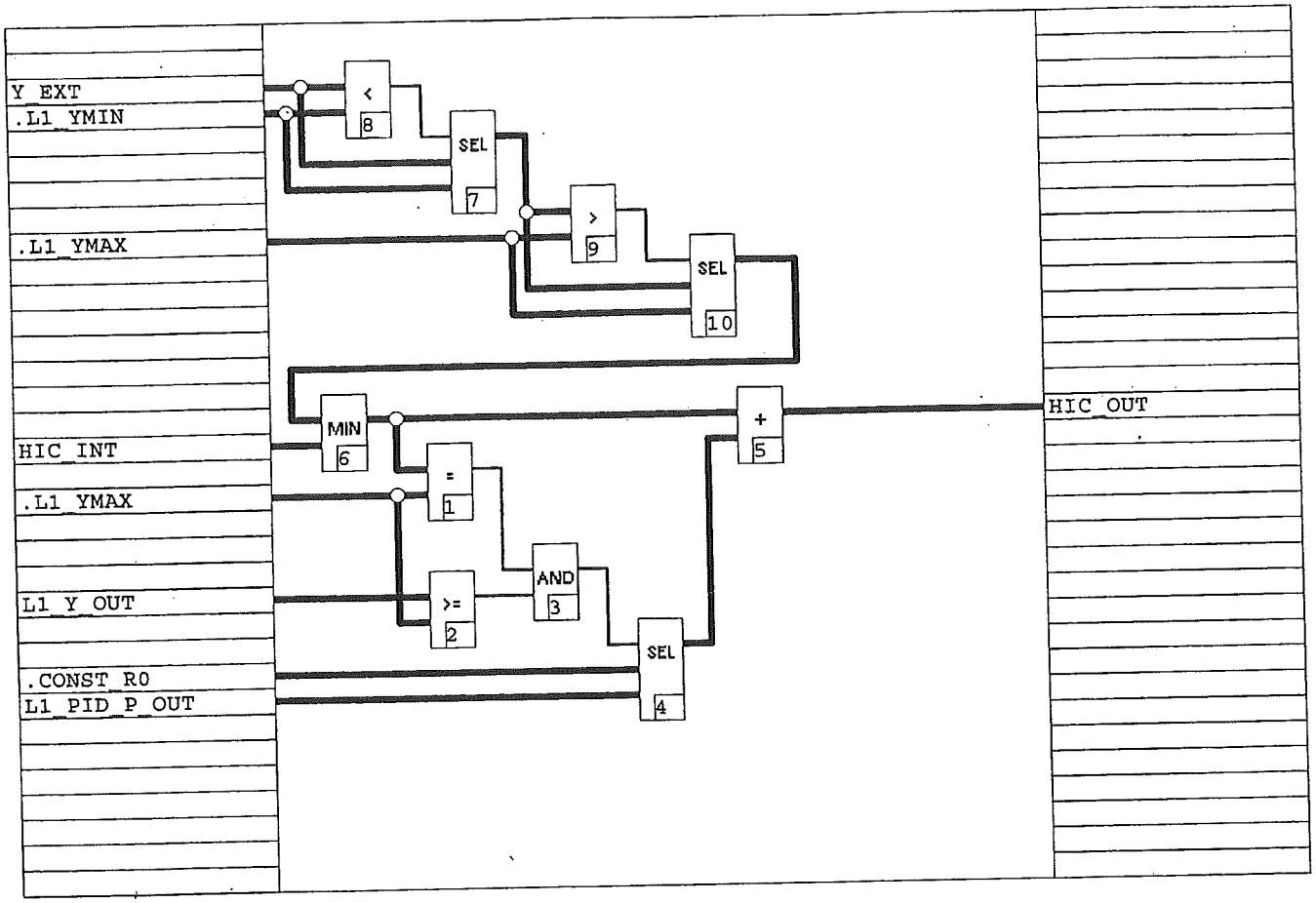

				Date	29.04.2005	N.7100175 KOSAIR 2005		Basic Program	L1_HIC_2	Customer	
				Proce	Rindlisbacher			U:/Protronic/Programz/Ko sair		Z. No.	
				Checke						ABB No.	ABB - .fic11077/X01/P04/B08-F
AN TURBO AG	Date	Name	Norm			Orig. 29.04.2005	Rep.t.	Rep.by		Item	Z. No. P. 3

Claudia Patruno RRM4 SPE 837019325 000 00 18.07.2005

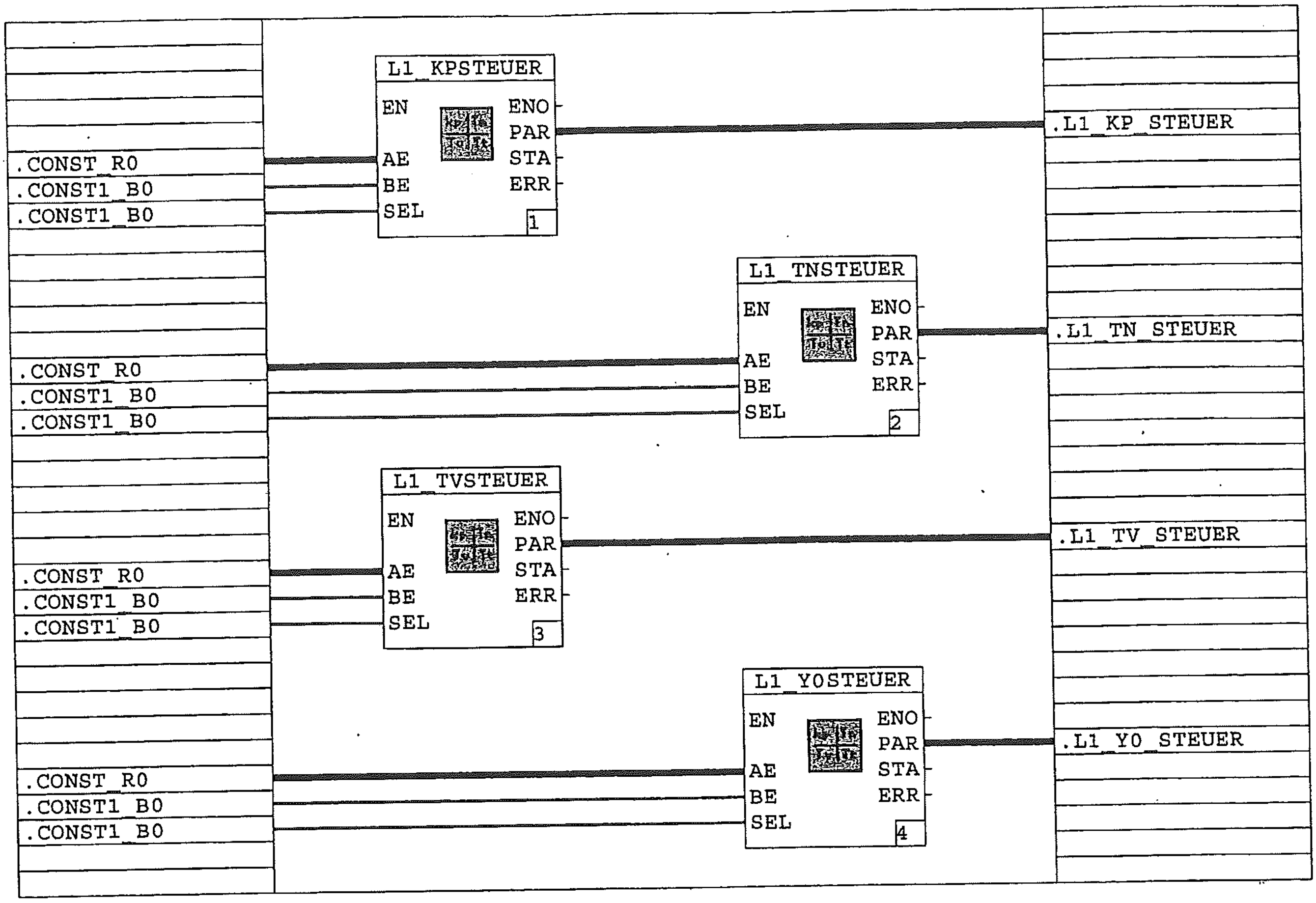

Claudia Patruno RRM4 SPE 837019325 000 00 18.07.2005

AN TURBO AG

Date	29.04.2005	N.7100175 KOSAIR 2005	Basic Program	L1_PI_PARA	Customer		
Proces	Rindlisbacher		U:/Protronic/Programs/Kosair		Z. No.		
Checke					ABB No.	ABB -	.fic11077/X01/P04/B09-F
Date / Name / Norm		Orig. 29.04.2005 / Rep.f.	Rep.by		Item	Z. No.	P. 1.

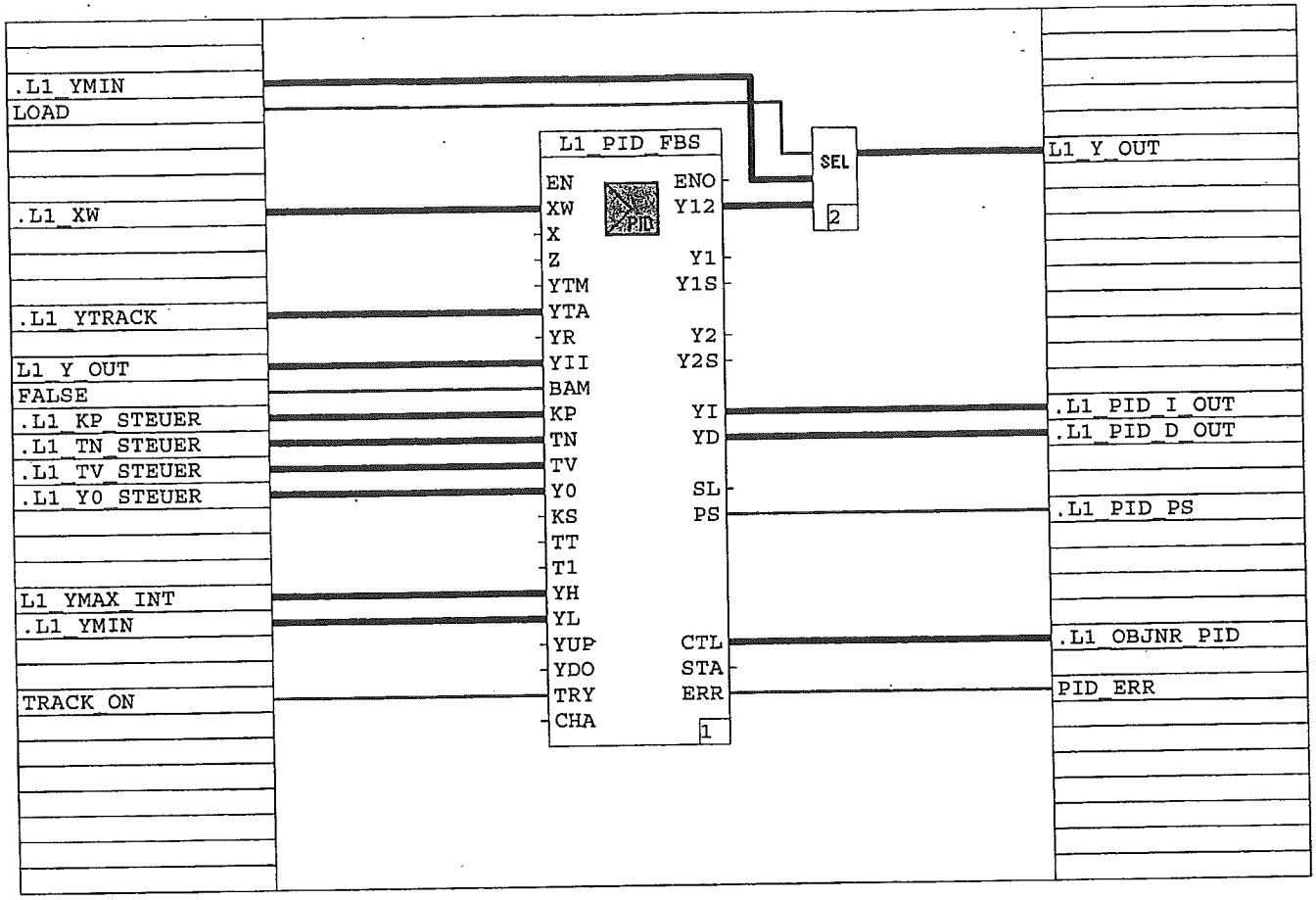

Claudia Patruno RRM4 SPE 837019325 000 00 18.07.2005

				Date	29.04.2005	N.7100175 KOSAIR 2005		Basic Program	L1_PID_PRO	Customer	-
				Proces	Rindlisbacher			U:/Protronic/Programs/Kosair		Z. No.	+
				Checke						ABB No.	ABB - .fic11077/X01/P04/B10-P
AN TURBO AG	Date	Name		Norm		Orig. 29.04.2005	Rep.f.	Rep.by		Item	Z. No. P.

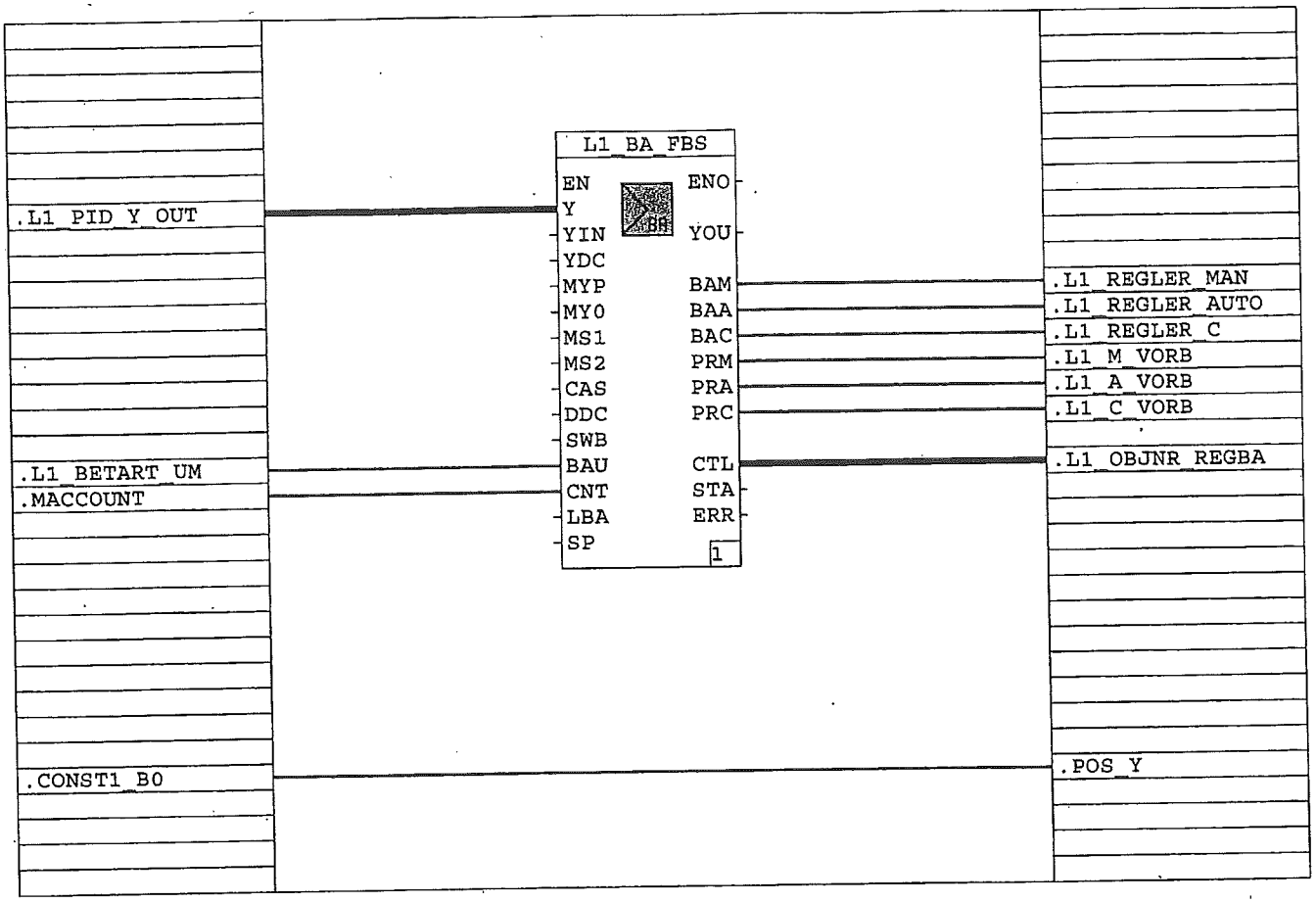

				Date	29.04.2005	N.7100175 KOSAIR 2005	Basic Program U:/Protronic/Programs/Kosair	L1_STDBA	Customer		
				Process	Rindlisbacher				Z. No.		
				Checke					ABB No.	ABB - .fic11077/X01/P04/B11-F	
AN TURBO AG	Date	Name	Norm			Orig. 29.04.2005	Rep.f.	Rep.by	Item	Z. No.	P. 1

Claudia Patruno RRM4 SPE 837019325 000 00 18.07.2005

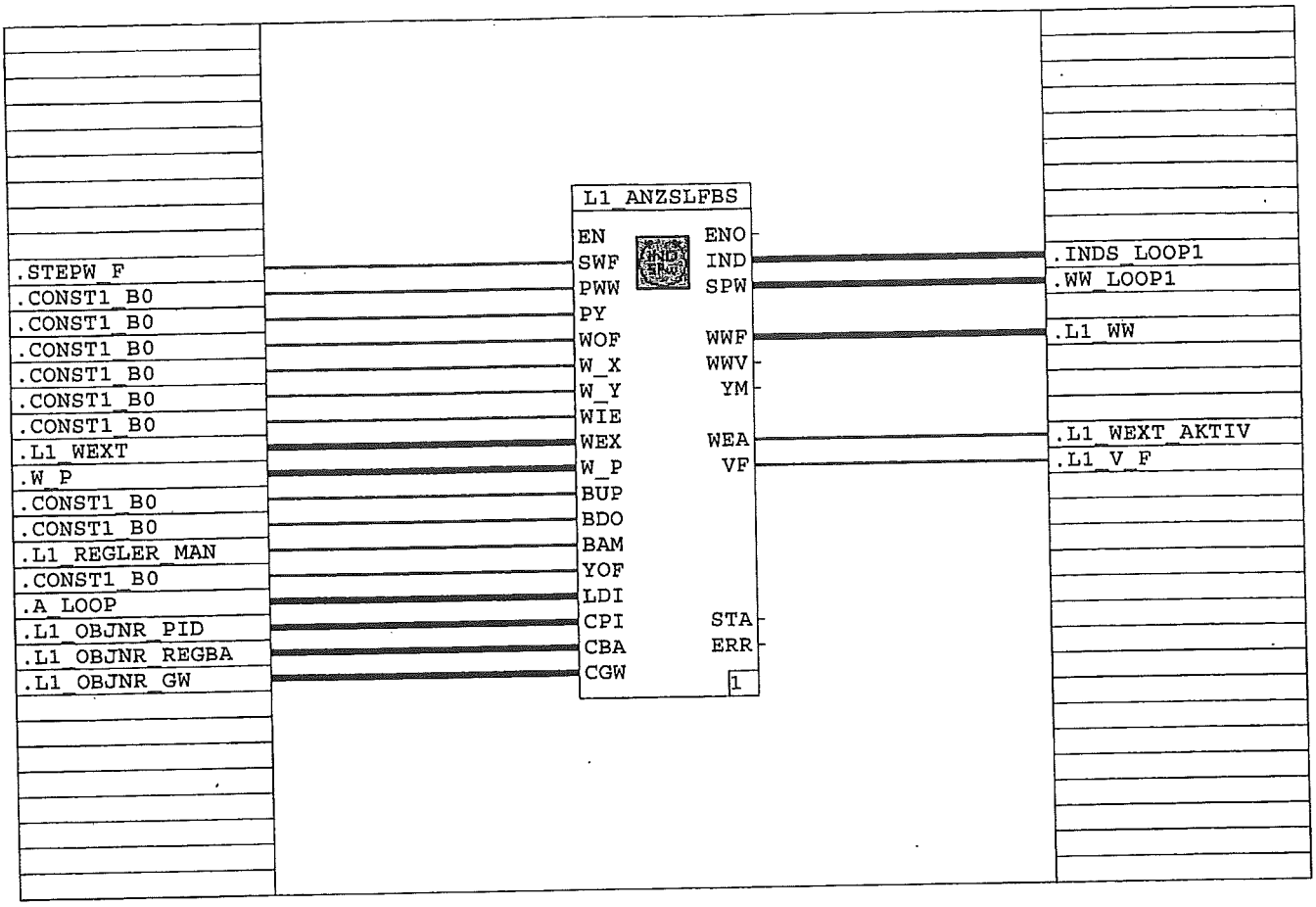

Claudia Patruno RRM4 SPE 837019325 000 00 18.07.2005

				Date	29.04.2005	N.7100175	Basic Program	L1_ANZSL	Customer		
				Proc.	Rindlisbacher	KOSAIR 2005	U:/Protronic/Programz/Ko		Z. No.		
				Checke			sair		ABB No.	ABB - .fic11077/X01/P04/B12-F	
AN TURBO AG	Date	Name	Norm			Orig. 29.04.2005	Rep.f.	Rep.by	Item	Z. No.	p. 2

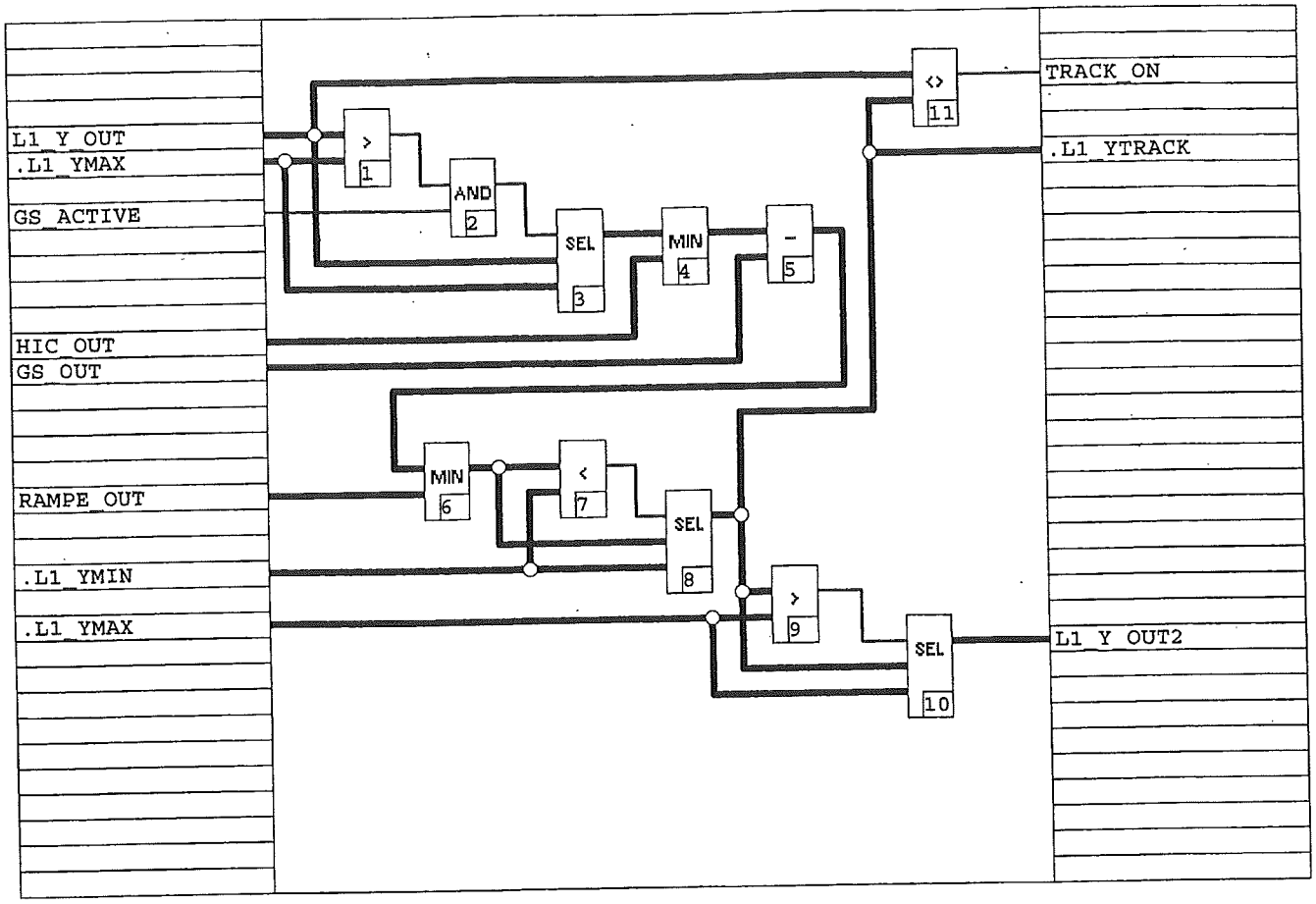

				Date	29.04.2005	N.7100175 KOSAIR 2005	Basic Program	L1_SORTIE	Customer	-	
				Proce	Rindlisbacher		U:/Protronic/Programs/Ko sair		Z. No.	+	
				Checke					ABB No.	ABB - .fic11077/X01/P04/B13-F	
AN TURBO AG		Date	Name	Norm		Orig. 29.04.2005	Rep.f.	Rep.by	Item	Z. No.	P.

Claudia Patruno RRM4 SPE 837019325 000 00 18.07.2005

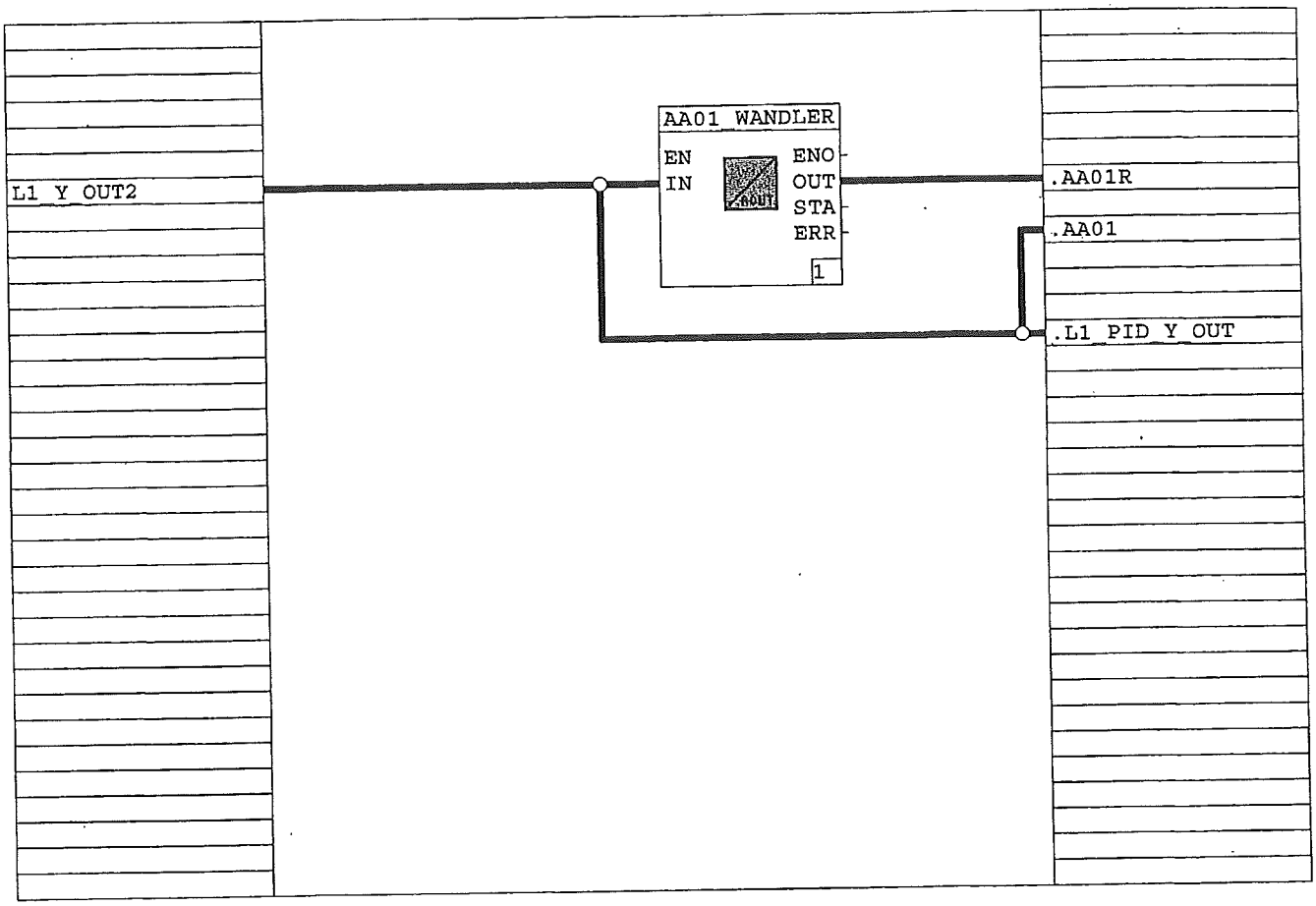

Claudia Patruno RRM4 SPE 837019325 000 00 18.07.2005

			Date	29.04.2005	N.7100175 KOSAIR 2005		Basic Program	PID_OUT	Customer		
			Proce	Bindlisbacher			U:/Protronic/Programs/Ko sair -		Z. No.		
			Checke						ABB No.	ABB - .fic11077/X01/P05/B01-F	
AN TURBO AG	Date	Name	Norm		Orig. 29.04.2005	Rep.f.	Rep.by		Item	Z. No.	P. 2

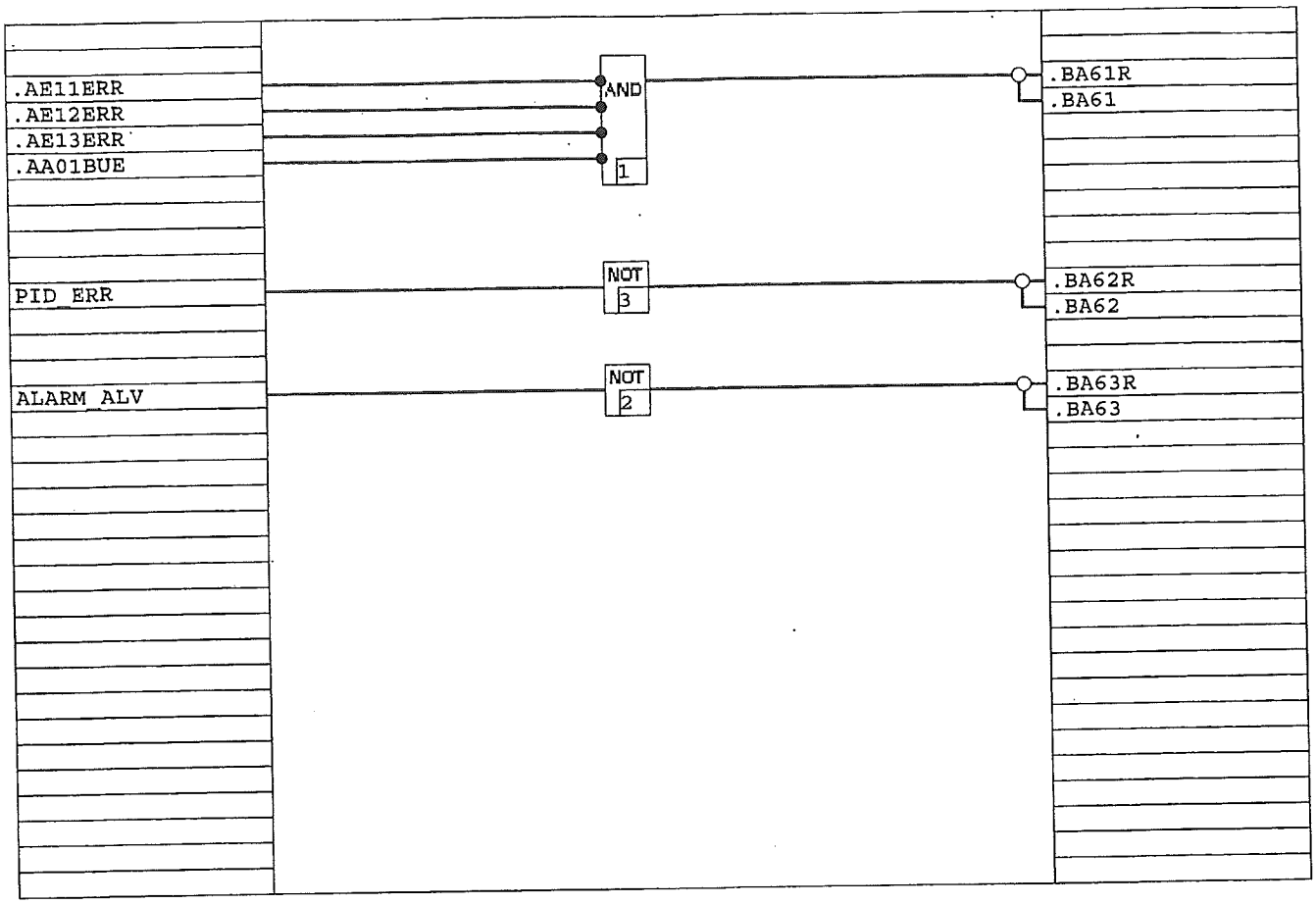

			Date	29.04.2005	N.7100175 KOSAIR 2005		Basic Program U:/Protronic/Programm/Ko sair	OUT_DIGIT	Customer Z. No.	
			Proces	Rindlisbacher					ABB No.	ABB .fic11077/X01/P06/B01-P
			Checke						Item	Z. No.
AN TURBO AG	Date	Name	Norm		Orig. 29.04.2005	Rep.f.	Rep.by			P.

Claudia Patruno RRM4 SPE 837019325 000 00 18.07.2005

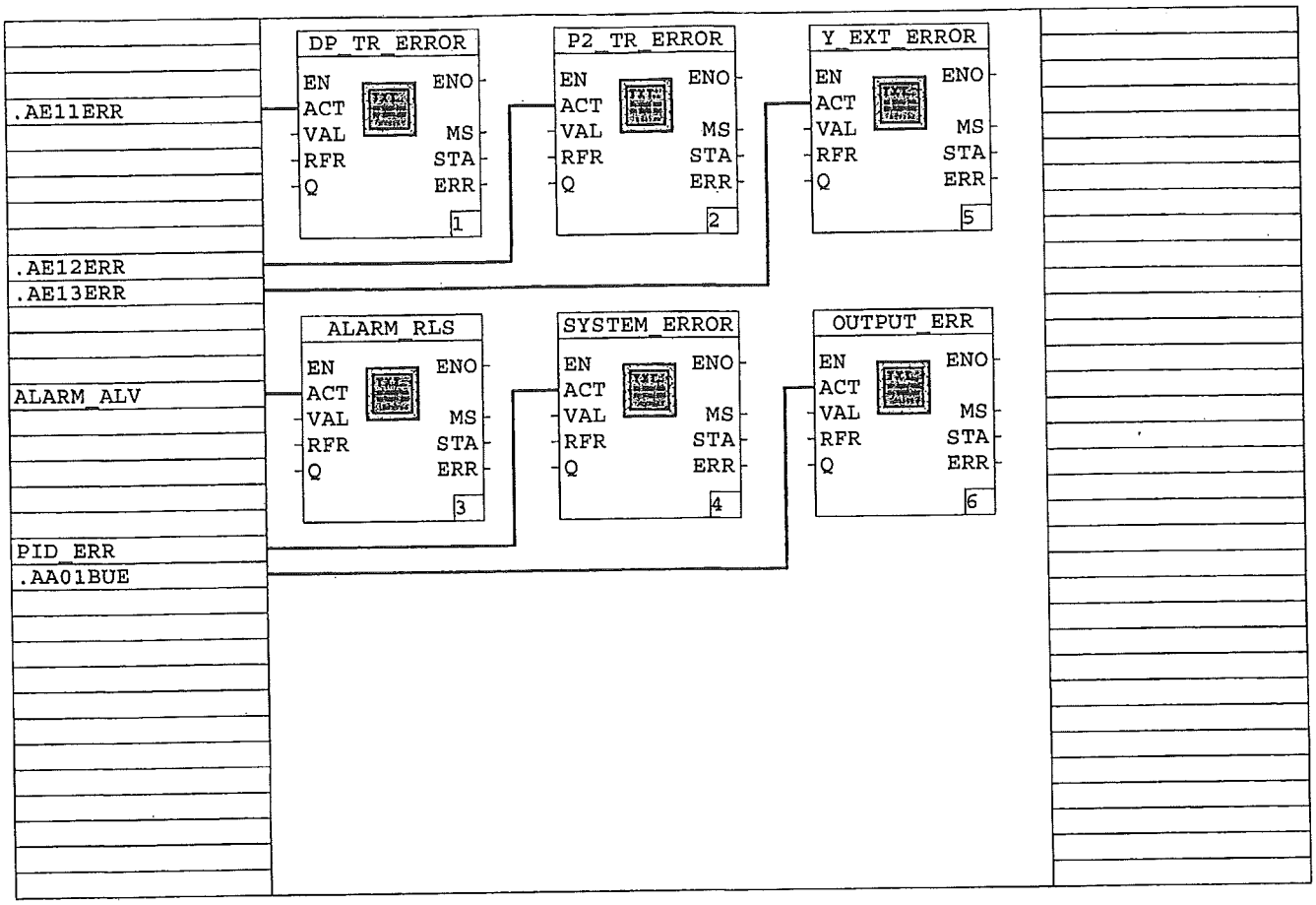

Claudia Patruno RRM4 SPE 837019325 000 00 18.07.2005

			Date	29.04.2005	N.7100175 KOSAIR 2005		Basic Program	MESSAGES	Customer	
			Proces	Rindliebacher			U:/Protronic/Programs/Kosair		Z. No.	
			Checke						ABB No.	ABB - .fic11077/X01/P07/B01-P
AN TURBO AG	Date	Name	Norm		Orig. 29.04.2005	Rep.f.	Rep.by		Item	Z. No. P. 2.

Standard instrument:

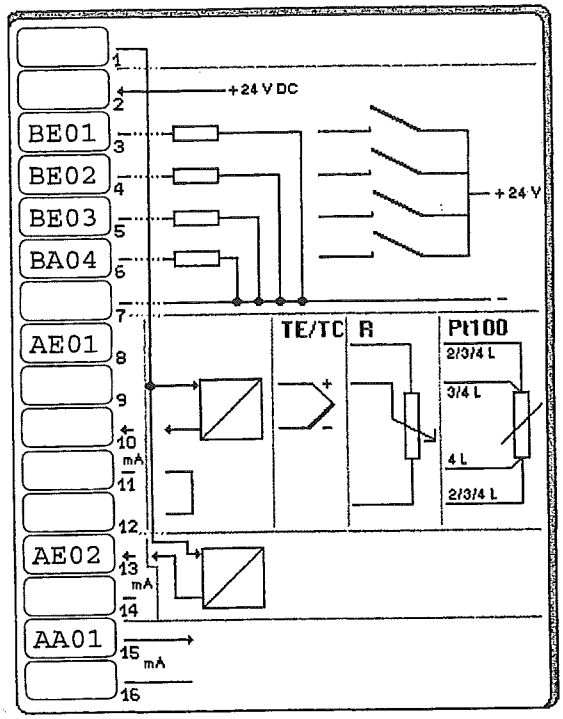

Module slot 1:

AI 4 * mA with TPS

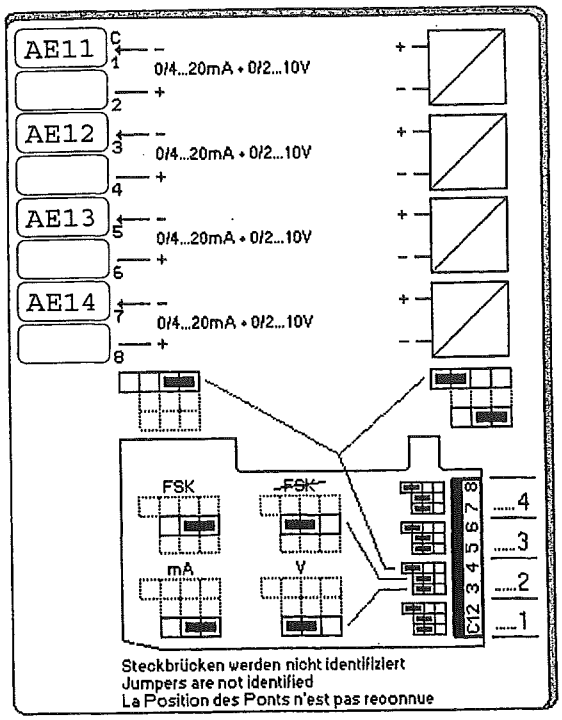

Module slot 5:

Profibus-DP Slave

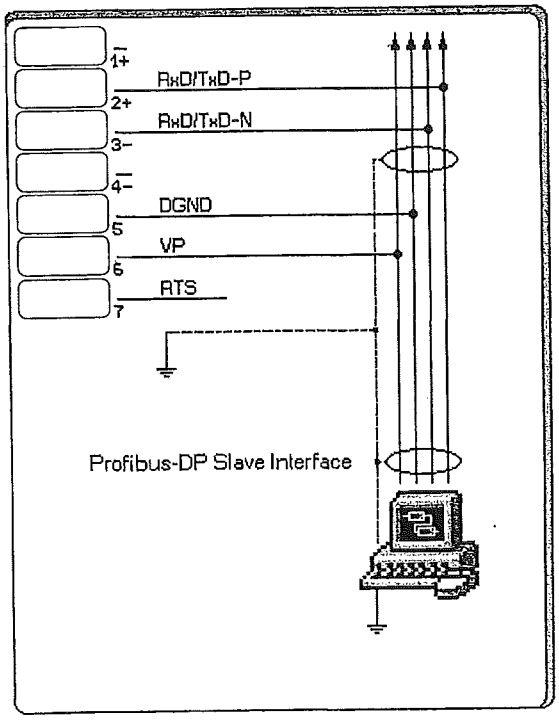

Module slot 6:

BO 4 * relay

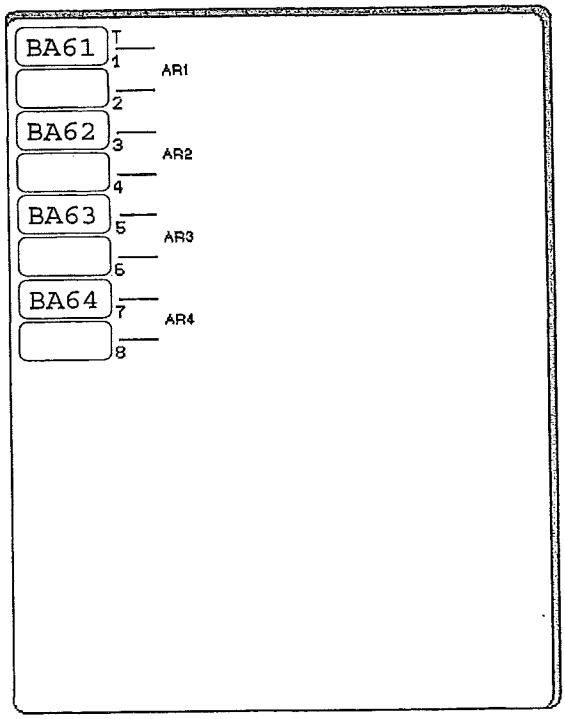

Claudia Patruno RRM4 SPE 837019325 000 00 18.07.2005

				Date	02.06.04	N.7100175 KOSAIR 2005		Basic Program	Configuration list	Customer	
				Proces	J. Walss			U:/Protronic/Programs/Ko sair		Z. No.	
				Checke						ABB No.	ABB
AN TURBO AG	Date	Name	Norm			Orig. 29.04.2005	Rep.f.	Rep.by		Item	Z. No.

Device configuration

Languages
B01-Q01: Language: 2 -   English

Binary inputs
B02-Q01: Lock-out, confi & param. menus: 0 - # not by BI
B02-Q02: Block all control actions: 0 - # not by BI
B02-Q03: Alarm acknowledgement: 0 - # not by BI
B02-Q04: Locking Menu-Key: 0 - # not by BI

Remote control
B04-Q01: Remote control: 1 - # LOCAL only

Alarm management
B10-Q01: Text/Alarm display: 1 -   on the front panel
B10-Q02: Acknowledgement: 0 - # none

Set Module type
B12-Q01: Slot 1: 25 -   Analoginput 4*mA+SUP
B12-Q02: Slot 2: 0 - # unoccupied
B12-Q03: Slot 3: 0 - # unoccupied
B12-Q04: Slot 4: 0 - # unoccupied
B12-Q05: Slot 5: 4 -   Profibus DP Slave module
B12-Q06: Slot 6: 70 -   Relay 4-fold
B12-Q07: Slot 7: 0 - # unoccupied

Password
B20-Q01: Password: 2 -   on + 30 sec.
B20-P02: Password: 2004

Communication
B30-P01: Modbus-Address: 1
B30-Q02: Baud rate: 9 -   57600
B30-Q03: Protocol: 2 - # Modbus RTU
B30-Q04: Parity: 2 - # even
B30-Q05: Time out: 1 - # 1 sec.
B30-P06: Profibus-DP-Slave address: 1
B30-Q07: Default_CFG_I: 0 - # not used
B30-Q08: Default_CFG_O: 0 - # not used
B30-Q09: Time out for: 2 -   Profibus

Configuration loop 1

Control function
B01-Q01: Control function: 1 - # Single loop controller
B01-Q04: Position feedback signal: 0 - # none
B01-Q05: Selftune: 0 - # off

Setpoints
B05-Q09: Setpoint display: 1 - # Target setpoint

Display
B06-Q01: Time period in trend window: 1 - # 75 seconds

Configuration loop 2

Control function
B01-Q01: Control function: 0 - # unused
B01-Q04: Position feedback signal: 0 - # none
B01-Q05: Selftune: 0 - # off

Configure AI

Analog input 01
B01-Q01: Signal type: 2 - # 4..20mA

Analog input 02
B02-Q01: Signal type: 2 - # 4..20mA

Claudia Patruno RRM4 SPE 837019325 000 00 18.07.2005

Analog input 11
B11-Q01: Signal type: 2 - 4..20mA
B11-Q15: Frequency input: 4 - # DIN 19240 pos.

Analog input 12
B12-Q01: Signal type: 2 - 4..20mA
B12-Q15: Frequency input: 4 - # DIN 19240 pos.

Analog input 13
B13-Q01: Signal type: 2 - 4..20mA
B13-Q15: Frequency input: 4 - # DIN 19240 pos.

Analog input 14
B14-Q01: Signal type: 2 - 4..20mA
B14-Q15: Frequency input: 4 - # DIN 19240 pos.

Configure AO

Analog output 01
B01-Q01: Signal type: 2 - # 4..20mA

Configure binary I/O

binary-input/output 01
B01-Q01: Signal type: 1 - # Binary input, control action, direct

binary-input/output 02
B02-Q01: Signal type: 1 - # Binary input, control action, direct

binary-input/output 03
B03-Q01: Signal type: 1 - # Binary input, control action, direct

binary-input/output 04
B04-Q01: Signal type: 3 - Binary output, normally open (0)

binary-input/output 61
B61-Q01: Signal type: 3 - Binary output, normally open (0)

binary-input/output 62
B62-Q01: Signal type: 3 - Binary output, normally open (0)

binary-input/output 63
B63-Q01: Signal type: 3 - Binary output, normally open (0)

binary-input/output 64
B64-Q01: Signal type: 3 - Binary output, normally open (0)

Online parameter loop 1

Selftune
P125: Max output bump: 5.0
P126: Max bump duration: T#00h00m15s
P127: Max +PV bump: 99999.0
P128: Max -PV bump: 99999.0

Tag name
P199: Tag name: FIC 11077